New Series 50

Industrial Sectional Doors

Technical Manual: Issue 01.03.2013

HÖRMANN

Contents

Contents		Page
Product descriptions		4 – 5
Technical data overview		6 – 7
Overview of track applications		8 – 9
SPU F42	Door leaf made of double-skinned steel sections (625 and 750 mm high), Stucco-textured / Micrograin	10
SPU F42	With wicket door and threshold rail (625 and 750 mm high), Stucco-textured / Micrograin	11
SPU F42	With wicket door with trip-free threshold (625 and 750 mm high), Stucco-textured / Micrograin	12
SPU F42	Door leaf made of double-skinned steel sections (375 and 500 mm high), Stucco-textured / Micrograin	13
SPU F42	With wicket door and threshold rail (375 and 500 mm high), Stucco-textured / Micrograin	14
SPU F42	With wicket door with trip-free threshold (375 and 500 mm high), Stucco-textured / Micrograin	15
SPU F42	Door leaf made of double-skinned steel sections (500 mm high), Micrograin	16
SPU F42	With wicket door and threshold rail (500 mm high), Micrograin	17
SPU F42	With wicket door with trip-free threshold (500 mm high), Micrograin	18
SPU F42	Glazing heights (centre of window from FFL) for door section heights of 500, 625 and 750 mm	19
SPU F42	Calculating the glazing heights (centre of window from FFL)	20
APU F42 / APU F42 Thermo	Door leaf made of aluminium extrusions, double-skinned bottom section	21
APU F42 / APU F42 Thermo	Bottom section height 750 with wicket door and threshold rail	22
APU F42 / APU F42 Thermo	Bottom section height 750 with wicket door and trip-free threshold	23
APU F42 / APU F42 Thermo	Bottom section height 1500 with wicket door and threshold rail	24
APU F42 / APU F42 Thermo	Bottom section height 1500 with wicket door and trip-free threshold	25
APU F42 S-Line	Door leaf made of aluminium extrusions, double-skinned bottom section	26
ALR F42 / ALR F42 Thermo	Door leaf made of standard aluminium extrusions or aluminium extrusions with thermal break	27
ALR F42 / ALR F42 Thermo	With wicket door and threshold rail	28
ALR F42 / ALR F42 Thermo	With wicket door with trip-free threshold	29
ALR F42 S-Line	Door leaf made of standard aluminium extrusions	30
ALR F42 Glazing	Door leaf made of standard aluminium extrusions	31
ALR F42 Vitraplan	Door leaf made of standard aluminium extrusions	32
Glazing / wicket door arrangements		33 – 35
Infills / fields and glazing series 40		36
Side doors	NT 60	37 – 39
Side doors	Arrangement of possible handing options	40 – 41
Track application N	Normal track application	42
Track application NA	Normal track application with high-mounted torsion spring shaft	43
Track application ND	Normal track application with inclination	44
Track application NH	Normal track application with minimum high-lift	45
Track application NS	Normal track application with double radius 2 × 45°	46
Track application GD	Normal track application with inclination and minimum high-lift	47
Track application L	Low headroom track application	48
Track application LD	Low headroom track application with inclination	49
Track application H	High-lift track application	50
Track application HA	High-lift track application with high-mounted torsion spring shaft	51
Track application HD	High-lift track application with inclination	52
Track application HG	High-lift track application with steep track	53
Track application HU	High-lift track application with low-mounted torsion spring shaft	54
Track application RD	High-lift track application with low-mounted torsion spring shaft and inclination	55
Track application RG	High-lift track application with low-mounted torsion spring shaft and steep track	56
Track application V	Vertical track application	57

Contents

Contents		Page
Track application VA	Vertical track application with high-mounted torsion spring shaft	58
Track application VU	Vertical track application with low-mounted torsion spring shaft	59
Track application WG	Vertical track application with low-mounted torsion spring shaft and steep track	60
Sideroom		61
Lintel Fitting		62
Bottom edge		63
Chain hoist		64
Hand pulley with rope or link steel chain		65
Ceiling anchors	(L = anchor length, see track applications)	66
Shaft operator WA 300		67 – 68
Shaft operator WA 400	As a frame-mounted operator	69
Shaft operator WA 400	With chain box	70
Shaft operator WA 400	For central mounting	71 – 73
Chain Drive Operator ITO 400		74
Operator SupraMatic H / HD		75 – 76
Door leaf speeds		77
Infill overview		78

Detailed door leaf constructions and track applications as well as fitting examples are provided in this manual.

No part may be reproduced without our prior permission.
All rights reserved.
All dimensions in mm.
Subject to design changes.

Product descriptions

Door type	Door leaf / wicket door
Sectional door SPU F42, double-skinned steel sections, 625 and 750 mm high, Stucco-textured / Micrograin	
Door leaf	Door sections made of polyurethane-foamed, hot-galvanized sections. Door sections Stucco-textured on inside and outside with uniform horizontal ribbing, or Micrograin with fine horizontal embossing outside and Stucco-textured inside, 625 and 750 mm high, depth 42 mm. All door sections with finger trap protection. Surface protection with polyester-primer coating. Ventilation grilles optional. Glazing frames of anodised aluminium extrusions in the standard version or with thermal breaks or alternatively sections with compound glazing are possible within the size range shown below. Fewer compound glazings or different arrangements are possible subject to the minimum distances.
Wicket door	Installed in the centre fields of the sectional door. **Cannot be installed into the outer fields – note the arrangement!** Only opening outwards, LH or RH hinged. On request with window sections or alternatively compound glazing from 625 / 750 mm (not in the wicket door section housing the lock) above FFL. Ventilation grilles are not possible in wicket doors. **Attention (for threshold rail): For grid heights 2000, 2125 and 2250, the clear opening height must not be lower than the door height.**
Sectional door SPU F42, double-skinned steel sections, 375 and 500 mm high, Stucco-textured / Micrograin	
Door leaf	Door sections made of polyurethane-foamed, hot-galvanized sections. Door sections Stucco-textured on inside and outside with uniform horizontal ribbing, or Micrograin with fine horizontal embossing outside and Stucco-textured inside, 375 and 500 mm high, depth 42 mm. All door sections with finger trap protection. Surface protection with polyester-primer coating. Ventilation grilles optional. Glazing frames of anodised aluminium extrusions in the standard version or with thermal breaks or alternatively sections with compound glazing are possible within the size range shown below. Fewer compound glazings or different arrangements are possible subject to the minimum distances.
Wicket door	Only to be installed in the centre fields of the sectional door. **Cannot be installed into the outer fields – note the arrangement!** Only opening outwards, LH or RH hinged. On request with window sections or alternatively compound glazing from 500 mm (not in the wicket door section housing the lock) above FFL. Ventilation grilles are not possible in wicket doors. **Attention (for threshold rail): For grid heights 2000 and 2125, the clear opening height must not be lower than the door height.**
Sectional door SPU F42, double-skinned steel sections, 500 mm high, Micrograin	
Door leaf	Door sections made of polyurethane-foamed, hot-galvanized sections. Door sections Micrograin with fine horizontal embossing outside and Stucco-textured inside, 500 mm high, depth 42 mm. All door sections with finger trap protection. Surface protection with polyester-primer coating. Ventilation grilles optional. Glazing frames of anodised aluminium extrusions in the standard version or with thermal breaks or alternatively sections with compound glazing are possible within the size range shown below. Fewer compound glazings or different arrangements are possible subject to the minimum distances.
Wicket door	Only to be installed in the centre fields of the sectional door. **Cannot be installed into the outer fields – note the arrangement!** Only opening outwards, LH or RH hinged. On request with window sections or alternatively compound glazing from 500 mm (not in the wicket door section housing the lock) above FFL. Ventilation grilles are not possible in wicket doors. **Attention (for threshold rail): For grid heights 2000 and 2125, the clear opening height must not be lower than the door height.**
Sectional door APU F42 / APU F42 Thermo, aluminium extrusions, double-skinned bottom section	
Door leaf	Bottom section of hot-galvanized sections, infilled with polyurethane foam, 750 (standard version) or 1500 mm high, Stucco-textured inside and outside with uniform horizontal ribbing, or Micrograin with fine horizontal embossing outside and Stucco-textured inside. Surface protection with polyester-primer coating. Other door sections with glazing of anodised aluminium extrusions in the standard version (APU F42) or with thermal breaks (APU F42 Thermo). Depth 42 mm. All door sections with finger trap protection. Infill: clear synthetic double panes, 26 mm. Ventilation grilles in the bottom section optional.
Wicket door	Depending on the door type, made of anodised aluminium extrusions in the standard version or with thermal breaks, installed into the centre fields of the door. **Cannot be installed into the outer fields – note the arrangement!** Only opening outwards, LH or RH hinged. Ventilation grilles are not possible in wicket doors. **Attention (for threshold rail): If the wicket door has the same number of sections as the sectional door, the clear opening height must not be lower than the door height (RM).**
Sectional door APU F42 S-Line, aluminium extrusions, double-skinned bottom section	
Door leaf	Bottom section of hot-galvanized sections, infilled with polyurethane foam, 750 (standard version), or 1500 mm high, Stucco-textured inside and outside with uniform horizontal ribbing, or Micrograin with fine horizontal embossing outside and Stucco-textured inside. Surface protection with polyester-primer coating. Other door sections with glazing of anodised aluminium extrusions in the standard version. Depth 48.5 mm. All door sections with finger trap protection. Infill: clear synthetic double panes, 26 mm. Ventilation grilles in the bottom section optional.
Sectional door ALR F42 / ALR F42 Thermo	
Door leaf	Door sections made of anodised aluminium extrusions in the standard version (ALR F42) or with thermal breaks (ALR F42 Thermo). Depth 42 mm. All door sections with finger trap protection. Bottom door section made of PU infill with 26 mm Stucco-textured aluminium sheet cover on both sides, 26 mm, other door sections with 26 mm clear synthetic double panes. Ventilation grilles in the bottom section optional.
Wicket door	Depending on the door type, made of anodised aluminium extrusions in the standard version or with thermal breaks, installed into the centre fields of the door. **Cannot be installed into the outer fields – note the arrangement!** Only opening outwards, LH or RH hinged. Ventilation grilles are not possible in wicket doors. **Attention (for threshold rail): If the wicket door has the same number of sections as the sectional door, the clear opening height must not be lower than the door height (RM).**
Sectional door ALR F42 S-Line, aluminium extrusions	
Door leaf	Door sections made of standard anodised aluminium extrusions, depth 48.5 mm. All door sections with finger trap protection. Bottom door section made of PU infill with 26 mm Stucco-textured aluminium sheet cover on both sides, other door sections with 26 mm clear synthetic double panes. Ventilation grilles in the bottom section optional.

Product descriptions

Door type	Door leaf / wicket door

Sectional door ALR F42 Glazing	
Door leaf	Door sections of standard anodised aluminium extrusions. Depth 42 mm. All door sections with finger trap protection. All door section infills in 6-mm laminated safety glass. Uniform infill heights.

Sectional door ALR F42 Vitraplan	
Door leaf	Door sections of standard polyester primer-coated aluminium extrusions. Depth 42 mm. All door sections with finger trap protection and synthetic double panes, 26 mm, clear, and 4 mm transparent synthetic glazings fitted in front, in a choice of brown or grey. Ventilation grilles are not possible in the bottom section.

Frame / track application

Enclosed, moulded angle frame with pressed-fitted external seal, made of hot-galvanized steel with screwed safety tracks.

Door lock	
Manually operated	Inside locking using a shootbolt, self-locking rotary latch (with track applications that have a low-mounted torsion spring shaft on request) or self-locking floor locking.
Power-driven	Inside locking using a shootbolt

Counterbalance

Torsion springs, with carrying cables on the side (with a low headroom track application, a combination of carrying chain and carrying cable).
The torsion springs are designed for track applications N, NB, ND, NS, NK, NA, NH, GD, GS, L and LD for at least 25000 closing cycles und for all other track applications for at least 50000 closing cycles.

Safety-related equipment according to DIN EN 12604

- Manually operated doors using a torsion spring with approved catch safety device *)
- Manually operated doors that have more than one torsion spring with approved spring safety device*) over a door height of 5000 mm, additional approved catch safety devices *)
- Power-driven doors with break-in-resistant anti-lift kit
- Inner and outer finger trap protection

* European patent

Seals

Floor seal made of 3-chamber EPDM profile with flexible adjustment lip, side seal, lintel seal and intermediate seal between the sections.

Technical Data Overview

Construction and quality features

		SPU F42
Resistance to wind load EN 12424	Door without wicket door, class	3 [4]
	Door with wicket door, LZ ≤ 4000, class	3 [4]
	Door with wicket door, LZ > 4000, class	2 [5]
Water tightness EN 12425	Door without wicket door, class	3 (70 Pa)
Air permeability EN 12426	Door without wicket door, class	2 [6]
	Door with wicket door, class	1 [7]
Acoustic insulation EN 717-1	Door without wicket door R = . . . dB	25
	Door with wicket door R = . . . dB	24
Thermal insulation EN 13241-1, appendix B EN 12428	Door without wicket door, U = W/(m²·K) [2]	1.0
	- Optional triple glazing, U = W/(m²·K) [2]	–
	- Optional climatic double panes (single-pane safety glass) U = W/(m²·K) [2]	–
	Door with wicket door, U = W/(m²·K) [2]	1.2
	- Optional triple glazing, U = W/(m²·K) [2]	
	Section, U = W/(m²·K)	0.50
Fire protection	Class	B2
Design	Self-supporting	●
	Depth, mm	42
Door sizes	Max. width mm, LZ	8000
	Max. height mm, RM [3]	7000
Space requirements	From page 42	
Material, door leaf	Steel, double-skinned, 42 mm	●
	Aluminium, standard profile	–
	Aluminium, profile with thermal break	–
Surface, door leaf	Galvanized steel, coated RAL 9002	●
	Galvanized steel, coated RAL 9006	○
	Galvanized steel, coated RAL to choose	○
	Anodised aluminium E6 / C0 (previously E6 / EV 1)	○
	Aluminium coated in RAL to choose	○
Wicket door	With trip-free threshold	○
Side door	Matching the door	○
Glazings	Type A section window	○
	Type D section window	○
	Type E section window	○
	Aluminium glazing frame	○
Seals	All-round on 4 sides	●
	Intermediate seal between the door sections	●
ThermoFrame	PVC hard / soft seal	○
Locking systems	Internal latches	●
	Outside / inside locking	○
Arrestor kit	For doors of up to 5 m with shaft operator	●
Safety equipment	Finger trap protection	●
	Side trap guards	●
	Spring break safeguard for manual operation	●
	Safety catch for doors with shaft operator	●
Fastening options	Concrete	●
	Steel	●
	Brickwork	●
	Others on request	

● = Standard
○ = Optional

1) With optional double pane (single-pane safety glass)
2) For a door surface of 5000 × 5000 mm
3) Door height above 7000 mm on request (not with door type ALR F42 Glazing)
4) Class 3 = 0.7 kN/m² or 120 km/h
5) Class 2 = 0.45 kN/m² or 96 km/h
6) Class 2 = 12 m³/m²h
7) Class 1 = 24 m³/m²h

Technical Data Overview

APU F42 S-Line	APU F42	APU F42 Thermo	ALR F42 S-Line	ALR F42	ALR F42 Thermo	ALR F42 Vitraplan	ALR F42 Glazing
3 [4]	3 [4]	3 [4]	3 [4]	3 [4]	3 [4]	3 [4]	3 [4]
–	3 [4]	3 [4]	–	3 [4]	3 [4]	–	–
–	2 [5]	2 [5]	–	2 [5]	2 [5]	–	–
3 (70 Pa)	3 (70 Pa)	3 (70 Pa)	3 (70 Pa)	3 (70 Pa)	3 (70 Pa)	3 (70 Pa)	3 (70 Pa)
2 [6]	2 [6]	2 [6]	2 [6]	2 [6]	2 [6]	2 [6]	2 [6]
–	1 [7]	1 [7]	–	1 [7]	1 [7]	–	–
23	23	23	22	23 (30 [1])	23 (30 [1])	23	30
–	22	22	–	22	22	–	–
3.4	3.5	2.9	3.2	3.3	2.7	3.2	6.2
2.9	2.9	2.4	2.8	3.0	2.4	3.0	–
–	2.4	2.0	–	2.6	2.1	–	2.6
–	3.7	3.1	–	3.5	2.9	–	–
–	3.1	2.6	–	3.2	2.6	–	–
–	–	–	–	–	–	–	–
B2	B2	B2	B2	B2	B2	B2	B2
●	●	●	●	●	●	●	●
42 / 48.5	42	42	48.5	42	42	42	42
5000	8000	7000	5000	8000	7000	6000	5500
7000	7000	7000	7000	7000	7000	7000	4000
●	●	●	–	–	–	–	–
●	●	–	●	●	–	●	●
–	–	●	–	–	●	–	–
○	○	○	–	–	–	–	–
●	●	●	–	–	–	–	–
○	○	○	–	–	–	–	–
●	●	●	●	●	●	●	●
○	○	○	○	○	○	○	○
–	○	○	–	○	○	–	–
○	○	○	○	○	○	○	–
–	–	–	–	–	–	–	–
–	–	–	–	–	–	–	–
–	–	–	–	–	–	–	–
●	●	●	●	●	●	●	●
●	●	●	●	●	●	●	●
●	●	●	●	●	●	●	●
○	○	○	○	○	○	○	○
●	●	●	●	●	●	●	●
○	○	○	○	○	○	–	–
●	●	●	●	●	●	●	●
●	●	●	●	●	●	●	●
●	●	●	●	●	●	●	●
●	●	●	●	●	●	●	●
●	●	●	●	●	●	●	●
●	●	●	●	●	●	●	●
●	●	●	●	●	●	●	●
●	●	●	●	●	●	●	●

Overview of Track Applications

n

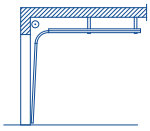

Normal track application

NA

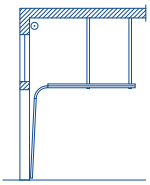

Like track application N, with high-mounted torsion spring shaft

Door height RM ≤ 5000 mm

ND

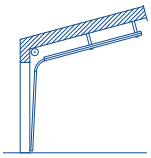

As with track application N, with inclination

NH

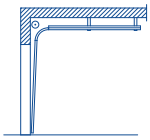

Like track application N, with minimum high-lift

NS

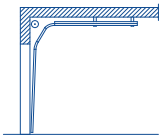

Like track application N, with double radius 2 × 45°

Door height RM ≤ 5000 mm

GD

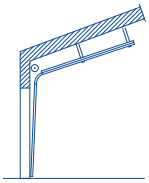

Like track application NH, with inclination (maximum 27°)

Door height RM ≤ 5000 mm

L

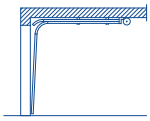

Low headroom track application

Door height RM ≤ 5000 mm

LD

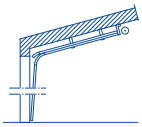

Like track application L, with inclination

Door height RM ≤ 5000 mm

H

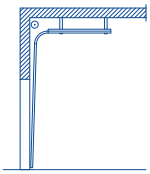

High-lift track

HA

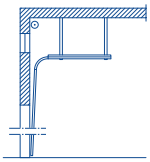

Like track application H, with high-mounted torsion spring shaft

Door height RM ≤ 3500 mm

HD

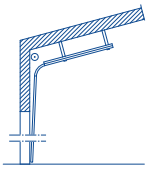

Like track application H, with inclination

HG

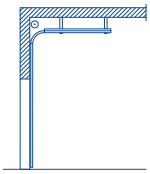

Like track application H, with steep track and minimum slot width of 120 mm (for loading ramp doors)
Door width LZ ≤ 3500 mm
Door height RM ≤ 5000 mm
Not possible for door types APU F42 S-Line / ALR F42 S-Line / ALR F42 glazing and doors with wicket door and with real glass infill!

HU

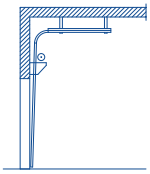

Like track application H, with low-mounted torsion spring shaft

Door height RM ≤ 5000 mm

RD

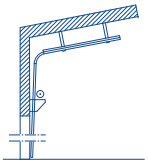

Like track application HU, with inclination

Door height RM ≤ 5000 mm

RG

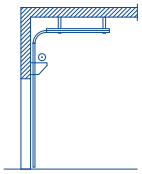

Like track application HU, with steep track and minimum slot width of 120 mm (for loading ramp doors)
Door width LZ ≤ 3500 mm
Door height RM ≤ 5000 mm
Not possible for door types APU F42 S-Line / ALR F42 S-Line / ALR F42 glazing and doors with wicket door and with real glass infill!

Overview of Track Applications

V

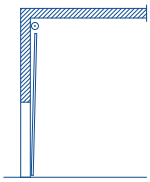

Vertical track application
(additional hand pulley required
for manually operated doors!)

VA

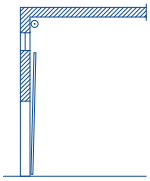

Like track application V, with high-mounted torsion spring shaft
(additional hand pulley required
for manually operated doors!)

Door height RM ≤ 3500 mm

VU

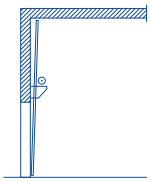

Like track application V with low-mounted torsion spring shaft
(additional hand pulley required
for manually operated doors!)

WG

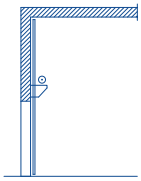

Like track application VU, with steep track and minimum slot width of 120 mm
(for loading ramp doors)
(additional chain hoist required
for manually operated doors!)
Door width LZ ≤ 3500 mm
Door height RM ≤ 5000 mm
Not possible for door types APU F42 S-Line / ALR F42 S-Line / ALR F42 glazing and doors with wicket door and with real glass infill!

Note:
An in-factory technical inspection is required for the following track applications.

NK

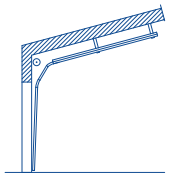

Like track application NS, but the degree values of both radii are adapted to the situation on site

Door height RM ≤ 5000 mm

GS

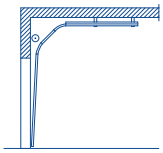

Like track application NH
with 2 × 45° – double radius

Door height RM ≤ 5000 mm

HS

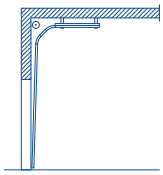

Like track application H,
with double radius 2 × 45°

HK

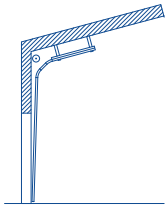

Like track application HS, but the degree values of both radii are adapted to the situation on site

VS

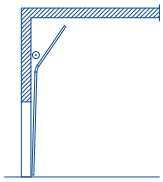

Like track application V, but in the top sections the tracks are diverted using radii where the ceiling is too low
(additional hand pulley required for manually operated doors!)

WS

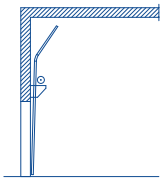

Like track application VU, but in the top sections the tracks are diverted using radii where the ceiling is too low
(additional hand pulley required
for manually operated doors!)

RS

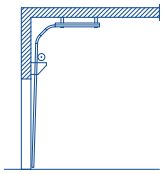

Like track application HU,
with 2 × 45° – double radius

Door height RM ≤ 5000 mm

RK

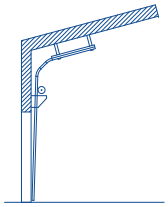

Like track application RS, but the degree values of both radii are adapted to the situation on site

Door height RM ≤ 5000 mm

Sectional Door SPU F42

Double-skinned steel sections
625 and 750 mm high
Stucco-textured / Micrograin

External views

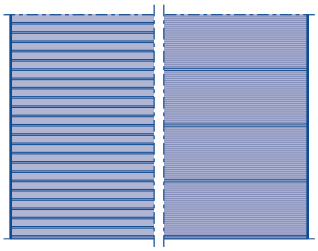

Glazing frame

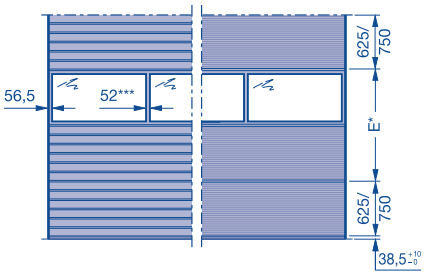

Compound glazing type A

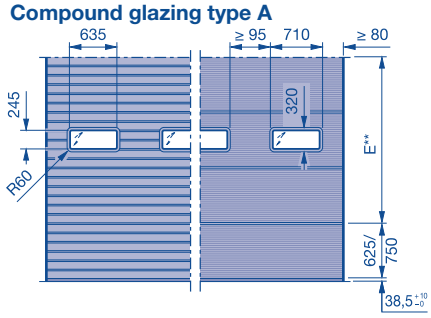

Compound glazing type D

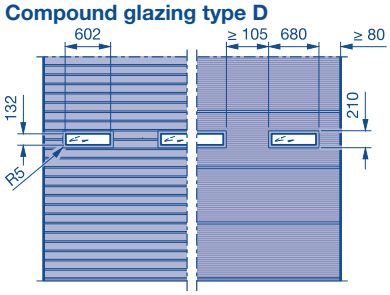

Compound glazing type E

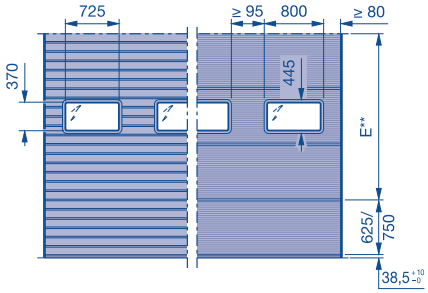

E* Fitting area for frame with glazing
E** Fitting area for compound glazing
*** Optionally with wide rail extrusions (91 mm)

Size range

In the size range shown, any door width can be manufactured in 10-mm increments and any door height in the 125-mm grid, taking the min. ceiling height into account. Intermediate heights using aluminium glazing frames or shortened top door section are possible.

RM		[A]	
Range 3	7000	4	6
	6875	5	5
	6750	–	9
	6625	1	8
	6500	2	7
	6375	3	6
	6250	4	5
	6125	5	4
	6000	–	8
	5875	1	7
	5750	2	6
	5625	3	5
	5500	4	4
	5375	5	3
	5250	–	7
	5125	1	6
Range 2	5000	2	5
	4875	3	4
	4750	4	3
	4625	5	2
	4500	–	6
	4375	1	5
	4250	2	4
	4125	3	3
	4000	4	2
	3875	5	1
	3750	–	5
	3625	1	4
Range 1	3500	2	3
	3375	3	2
	3250	4	1
	3125	5	–
	3000	–	4
	2875	1	3
	2750	2	2
	2625	3	1
	2500	4	–
	2375	4	–****
	2250	–	3
	2125	1	2
	2000	2	1
	1875	3	–

[1]	2	3	4	5	Number of infills / fields per aluminium frame
(see table 1)					Number of compound glazings per door section
Number of infills / fields × 2					Number of ventilation grilles, ventilation area 40 cm² per grille

1500 2000 2250 2500 2750 3000 3250 3500 3750 4000 4250 4500 4750 5000 5250 5500 5750 6000

SPB 52

LZ →

Notes:

- When using a shaft operator (installation example 5), the door lock is always on the side opposite the operator
- For a view of the matching appearance with doors with wicket doors see page 33 – 35.
- Number of glazings, matching view to series 40, see page 36.

Table 1:
Number of compound glazings per door section

Type	Each	Door width
A, D	1	1200 – 1740 mm
	2	1750 – 3000 mm
	3	3010 – 4500 mm
	4	4510 – 5500 mm
	5	5510 – 6000 mm
E	1	1200 – 1850 mm
	2	1860 – 3000 mm
	3	3010 – 4500 mm
	4	4510 – 5500 mm
	5	5510 – 6000 mm

On request

[1] 1 → 1740 on request
[A] Number of door sections TH = 625 mm and TH = **750** mm
RM Grid height
LZ Clear frame dimensions **(from 1200)**
→ Up to LZ
SPB Rail width
**** Top door section shortened to 500 mm

Sectional Door SPU F42
With Wicket Door and Threshold Rail

Double-skinned steel sections

625 and 750 mm high, Stucco-textured / Micrograin

External views

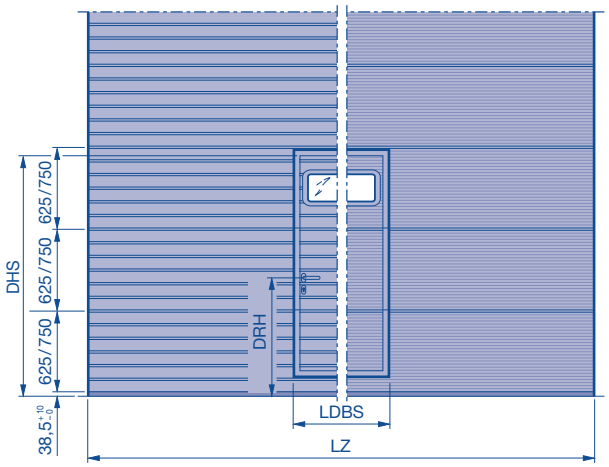

*****Note on fitting compound glazings:**
For door widths from 1750 – 3000 mm, a compound glazing can **only** be fitted into the wicket door. No compound glazing can be fitted to the left or right of the wicket door.

Clear passage width (LDBS) = 940 mm*
* For a door width of 1750 - 1840 mm, the clear passage width is 833 mm.

Lever heights (DRH)
Bottom door section 625 = 955.5
Bottom door section 750 = 1080.5

Size range

In the size range shown, any door width can be manufactured in 10-mm increments and any door height in the 125-mm grid, taking the min. ceiling height into account. Intermediate heights using aluminium glazing frames or shortened door section above wicket door are possible.

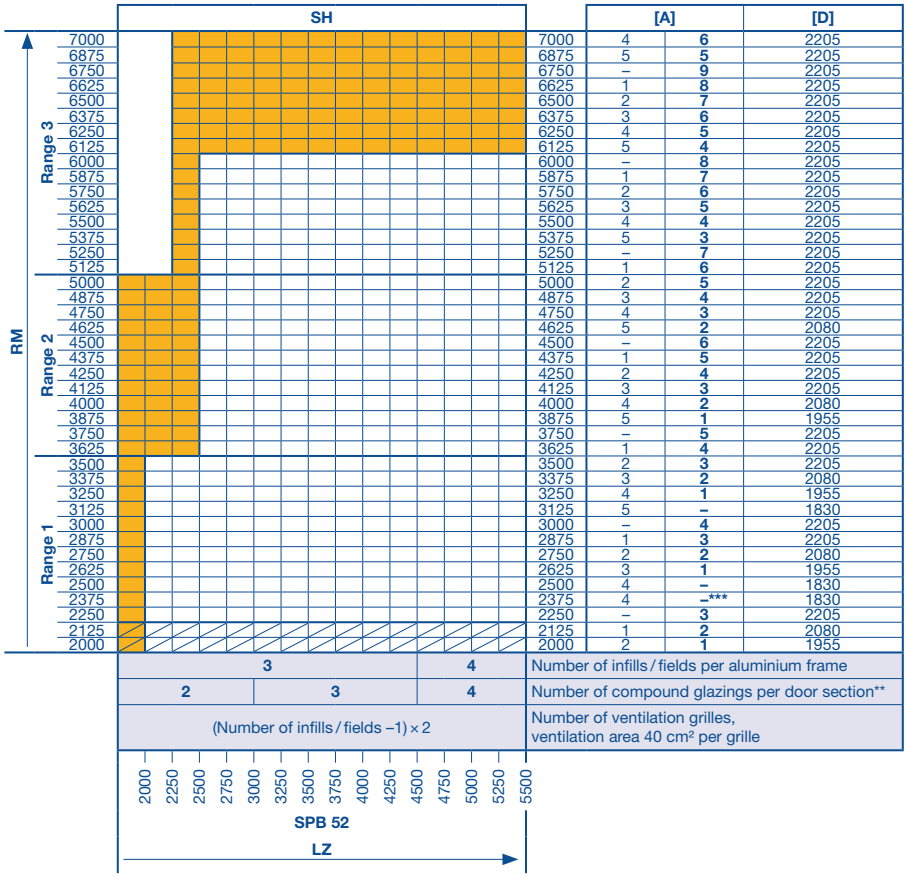

	[A]		[D]
7000	4	**6**	2205
6875	5	**5**	2205
6750	–	**9**	2205
6625	1	**8**	2205
6500	2	**7**	2205
6375	3	**6**	2205
6250	4	**5**	2205
6125	5	**4**	2205
6000	–	**8**	2205
5875	1	**7**	2205
5750	2	**6**	2205
5625	3	**5**	2205
5500	4	**4**	2205
5375	5	**3**	2205
5250	–	**7**	2205
5125	1	**6**	2205
5000	2	**5**	2205
4875	3	**4**	2205
4750	4	**3**	2205
4625	5	**2**	2080
4500	–	**6**	2205
4375	1	**5**	2205
4250	2	**4**	2205
4125	3	**3**	2205
4000	4	**2**	2080
3875	5	**1**	1955
3750	–	**5**	2205
3625	1	**4**	2205
3500	2	**3**	2205
3375	3	**2**	2080
3250	4	**1**	1955
3125	5	**–**	1830
3000	–	**4**	2205
2875	1	**3**	2205
2750	2	**2**	2080
2625	3	**1**	1955
2500	4	**–**	1830
2375	4	**–*****	1830
2250	–	**3**	2205
2125	1	**2**	2080
2000	2	**1**	1955

Notes:
- When using a shaft operator (installation example 5), the door lock is always on the side opposite the operator
- For a view of the matching appearance with doors without wicket doors see page 33 – 35.
- Number of glazings, matching view to series 40, see page 36.

On request

Glazings on request

[A]	Number of door sections TH = 625 mm and TH = **750** mm
[D]	Clear passage heights (DHS) of wicket door to grid height
SH	Threshold height **(200)**
SPB	Rail width
DHS	Clear passage height of wicket door
RM	Grid height
LDBS	Clear passage width
DRH	Lever height
LZ	Clear frame dimensions **(from 1750)**
*******	Top door section shortened to 500 mm

Sectional Door SPU F42
With Wicket Door with Trip-Free Threshold

Double-skinned steel sections

625 and 750 mm high, Stucco-textured / Micrograin

External views

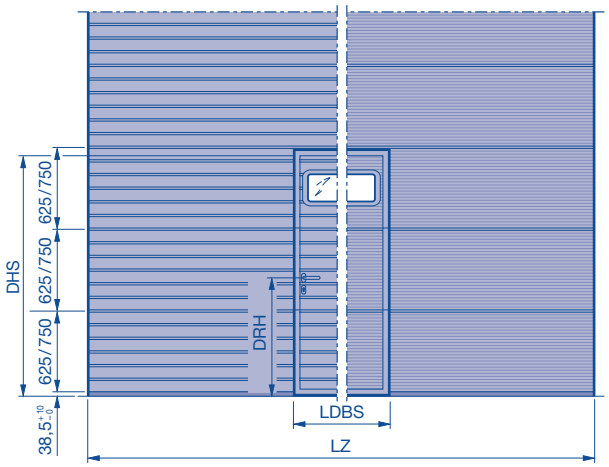

*****Note on fitting compound glazings:**
For door widths from 1750 – 3000 mm, a compound glazing can **only** be fitted into the wicket door. No compound glazing can be fitted to the left or right of the wicket door.

Clear passage width (LDBS) = 940 mm*
* For a door width of 1750 - 1840 mm, the clear passage width is 833 mm.

Lever heights (DRH)
Bottom door section 625 = 955.5
Bottom door section 750 = 1080.5

Size range

In the size range shown, any door width can be manufactured in 10-mm increments and any door height in the 125-mm grid, taking the min. ceiling height into account. Intermediate heights using aluminium glazing frames or shortened door section above wicket door are possible.

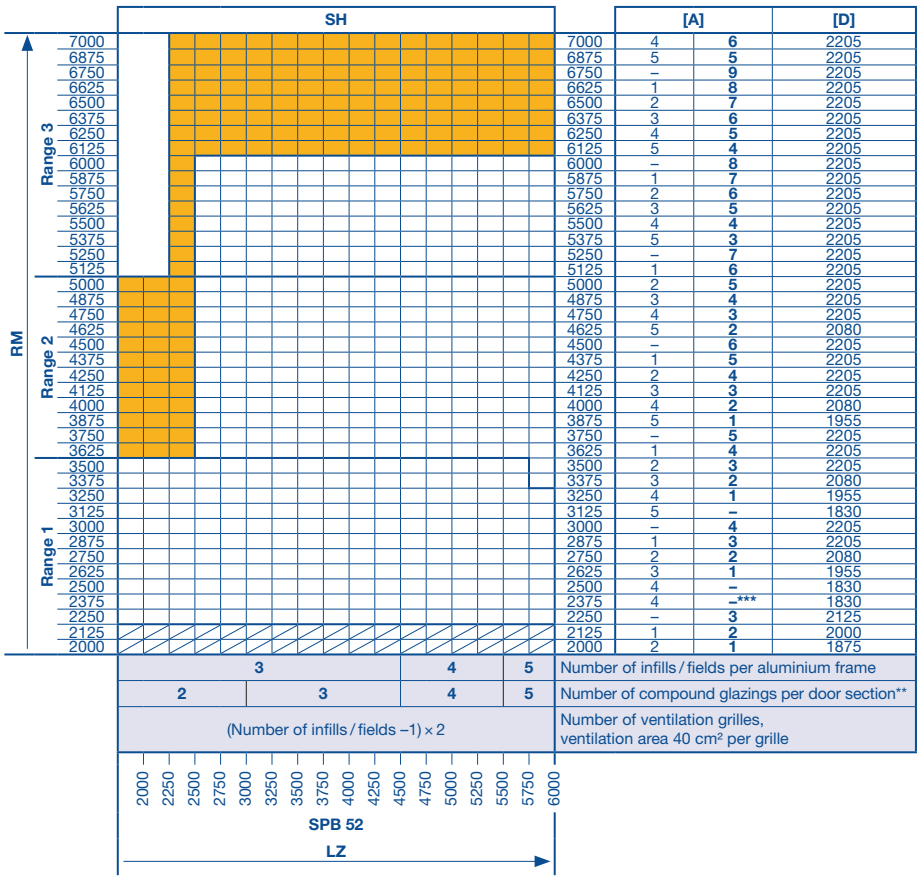

RM	SH	[A]		[D]
7000	7000	4	6	2205
6875	6875	5	5	2205
6750	6750	–	9	2205
6625	6625	1	8	2205
6500	6500	2	7	2205
6375	6375	3	6	2205
6250	6250	4	5	2205
6125	6125	5	4	2205
6000	6000	–	8	2205
5875	5875	1	7	2205
5750	5750	2	6	2205
5625	5625	3	5	2205
5500	5500	4	4	2205
5375	5375	5	3	2205
5250	5250	–	7	2205
5125	5125	1	6	2205
5000	5000	2	5	2205
4875	4875	3	4	2205
4750	4750	4	3	2205
4625	4625	5	2	2080
4500	4500	–	6	2205
4375	4375	1	5	2205
4250	4250	2	4	2205
4125	4125	3	3	2205
4000	4000	4	2	2080
3875	3875	5	1	1955
3750	3750	–	5	2205
3625	3625	1	4	2205
3500	3500	2	3	2205
3375	3375	3	2	2080
3250	3250	4	1	1955
3125	3125	5	–	1830
3000	3000	–	4	2205
2875	2875	1	3	2205
2750	2750	2	2	2080
2625	2625	3	1	1955
2500	2500	4	–	1830
2375	2375	4	–***	1830
2250	2250	–	3	2125
2125	2125	1	2	2000
2000	2000	2	1	1875

Range 3: 7000 – 6125
Range 2: 6000 – 3625
Range 1: 3500 – 2000

3			4	5	Number of infills / fields per aluminium frame
2	3		4	5	Number of compound glazings per door section**
(Number of infills / fields –1) × 2					Number of ventilation grilles, ventilation area 40 cm² per grille

2000 2250 2500 2750 3000 3250 3500 3750 4000 4250 4500 4750 5000 5250 5500 5750 6000

SPB 52

LZ

Notes:
- When using a shaft operator (installation example 5), the door lock is always on the side opposite the operator
- For a view of the matching appearance with doors without wicket doors see page 33 – 35.
- Number of glazings, matching view to series 40, see page 36.

On request

Glazings on request

[A]	Number of door sections TH = 625 mm and TH = **750** mm
[D]	Clear passage heights (DHS) of wicket door to grid height
SH	Threshold height **(rising from 5 to 10)**
SPB	Rail width
DHS	Clear passage height of wicket door
RM	Grid height
LDBS	Clear passage width
DRH	Lever height
LZ	Clear frame dimensions **(from 1750)**
***	Top door section shortened to 500 mm

Sectional Door SPU F42
Double-Skinned Steel Sections

375 and 500 mm high

Stucco-textured / Micrograin

External views

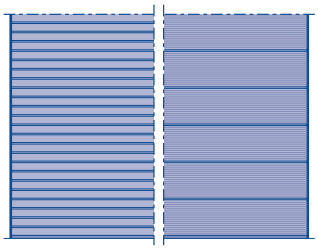

Glazing frame

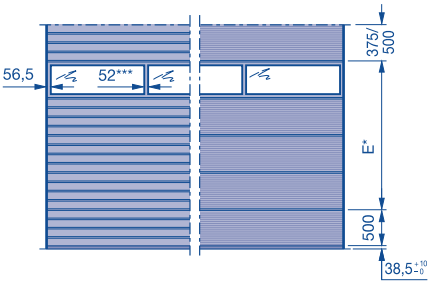

Compound glazing type A

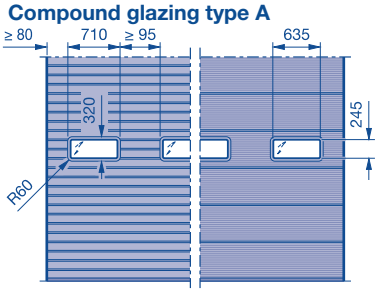

Compound glazing type D

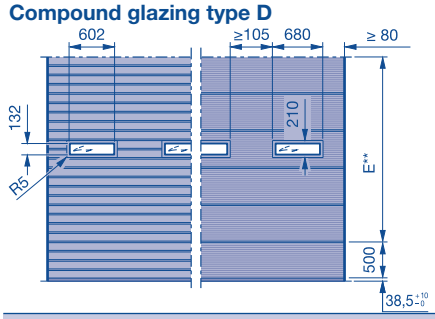

E* Fitting area for frame 500 with glazing
E** Fitting area for compound glazing
*** Optionally with wide rail extrusions (91 mm)

Size range

In the size range shown, any door width can be manufactured in 10-mm increments and any door height in the 125-mm grid, taking the min. ceiling height into account. Intermediate heights using aluminium glazing frames or shortened top door section are possible.

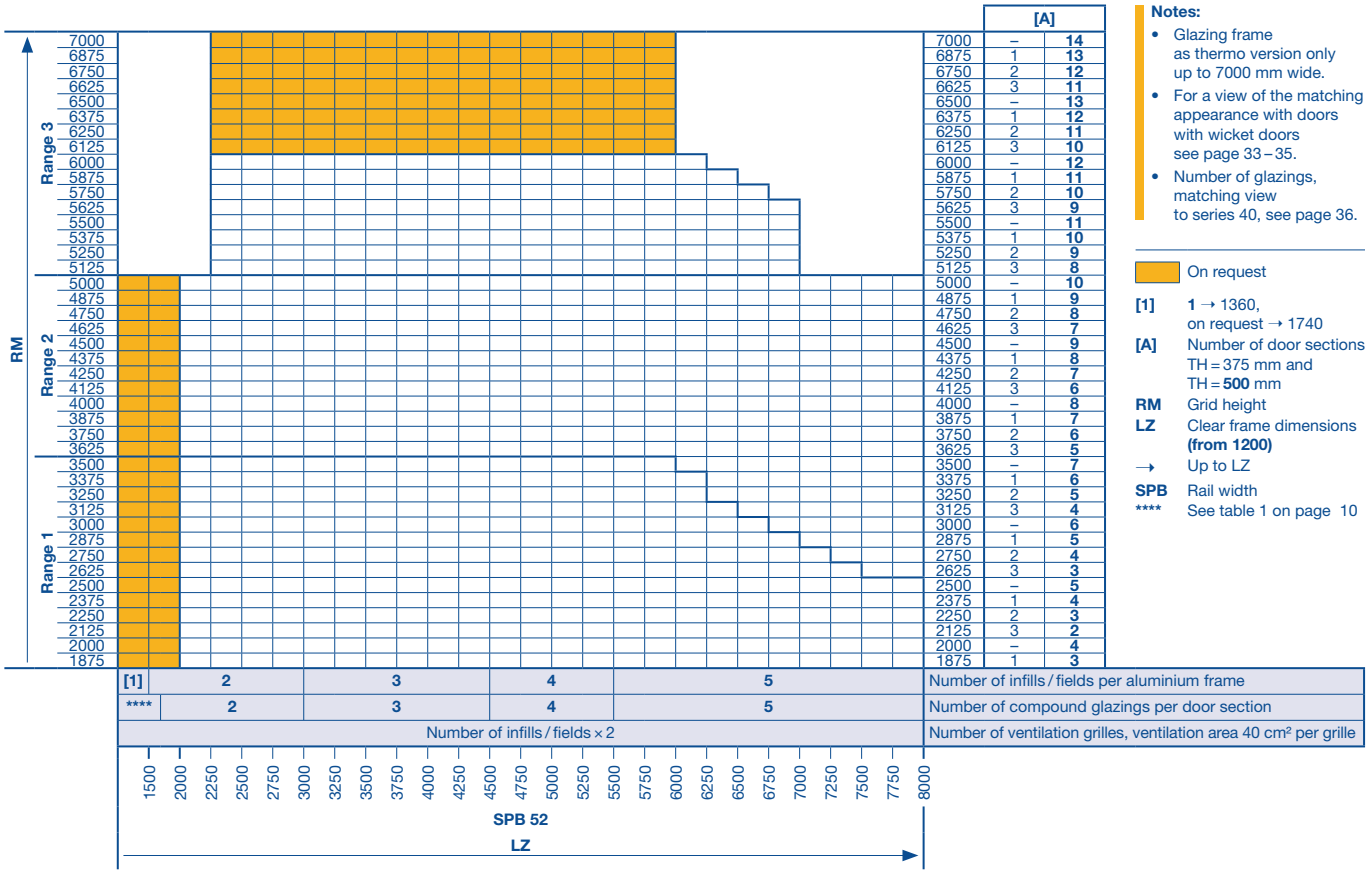

Notes:

- Glazing frame as thermo version only up to 7000 mm wide.
- For a view of the matching appearance with doors with wicket doors see page 33 – 35.
- Number of glazings, matching view to series 40, see page 36.

On request

[1] **1** → 1360, on request → 1740

[A] Number of door sections TH = 375 mm and TH = **500** mm

RM Grid height

LZ Clear frame dimensions **(from 1200)**

→ Up to LZ

SPB Rail width

******** See table 1 on page 10

Sectional Door SPU F42
With Wicket Door and Threshold Rail

Double-skinned steel sections
375 and 500 mm high, Stucco-textured / Micrograin

External view

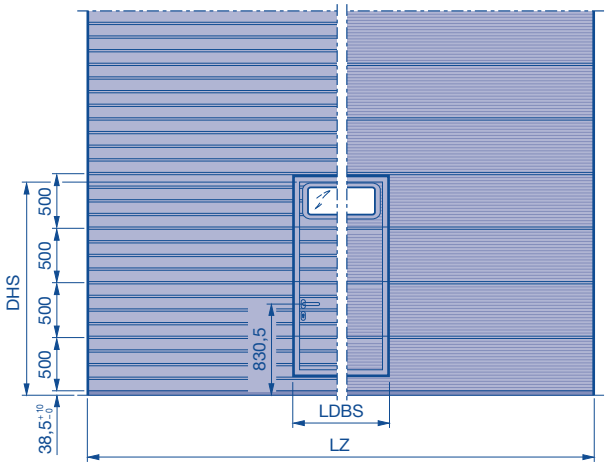

*****Note on fitting compound glazings:**
For door widths from 1750 – 3000 mm, a compound glazing can **only** be fitted into the wicket door. No compound glazing can be fitted to the left or right of the wicket door.

Clear passage width (LDBS) = 940 mm*

* For a door width of 1750 - 1840 mm, the clear passage width is 833 mm.

Grid height	Clear passage height of wicket door (DHS)
2000	1955
2125	2080
2250	1830
2625	2080
All other grid heights	1955

Size range

In the size range shown, any door width can be manufactured in 10-mm increments and any door height in the 125-mm grid, taking the min. ceiling height into account. Intermediate heights using aluminium glazing frames or shortened door section above wicket door are possible.

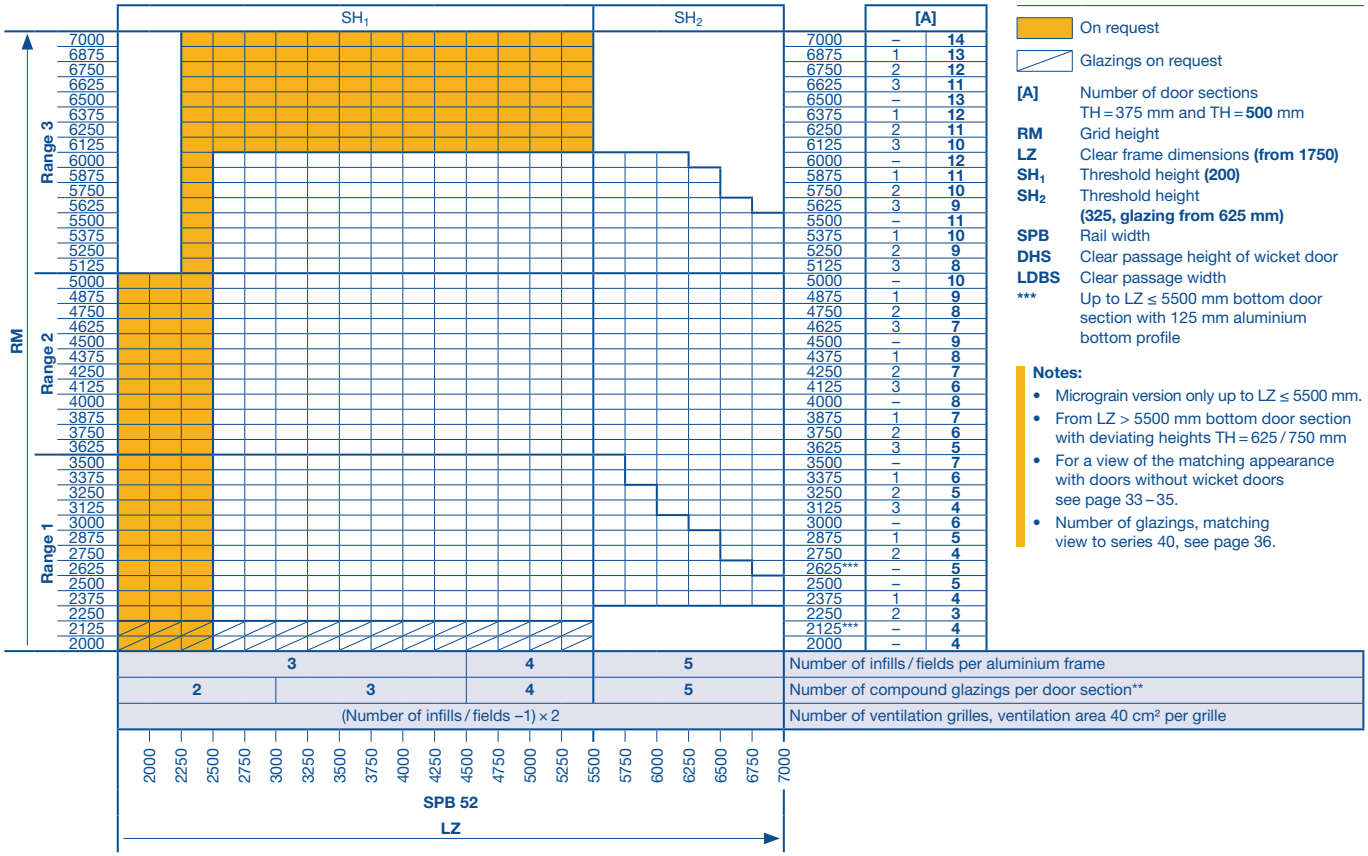

On request

Glazings on request

[A] Number of door sections TH = 375 mm and TH = **500** mm
RM Grid height
LZ Clear frame dimensions **(from 1750)**
SH_1 Threshold height **(200)**
SH_2 Threshold height **(325, glazing from 625 mm)**
SPB Rail width
DHS Clear passage height of wicket door
LDBS Clear passage width
******* Up to LZ ≤ 5500 mm bottom door section with 125 mm aluminium bottom profile

Notes:
- Micrograin version only up to LZ ≤ 5500 mm.
- From LZ > 5500 mm bottom door section with deviating heights TH = 625 / 750 mm
- For a view of the matching appearance with doors without wicket doors see page 33 – 35.
- Number of glazings, matching view to series 40, see page 36.

Sectional Door SPU F42
With Wicket Door with Trip-Free Threshold

Double-skinned steel sections

375 and 500 mm high, Stucco-textured / Micrograin

External view

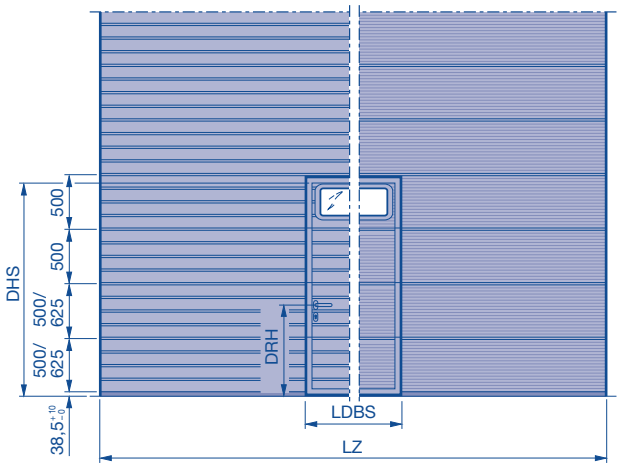

*****Note on fitting compound glazings:**
For door widths from 1750 – 3000 mm, a compound glazing can **only** be fitted into the wicket door. No compound glazing can be fitted to the left or right of the wicket door.

Clear passage width (LDBS) = 940 mm*

* For a door width of 1750 - 1840 mm, the clear passage width is 833 mm.

Grid height	Clear passage height of wicket door (DHS)
2000	1875
2125	2000
2250	2125
2625	2080
All other grid heights	1955

Lever heights (DRH)
Bottom door section 500 = 830.5
Bottom door section 625 = 955.5

Size range

In the size range shown, any door width can be manufactured in 10-mm increments and any door height in the 125-mm grid, taking the min. ceiling height into account. Intermediate heights using aluminium glazing frames or shortened door section above wicket door are possible.

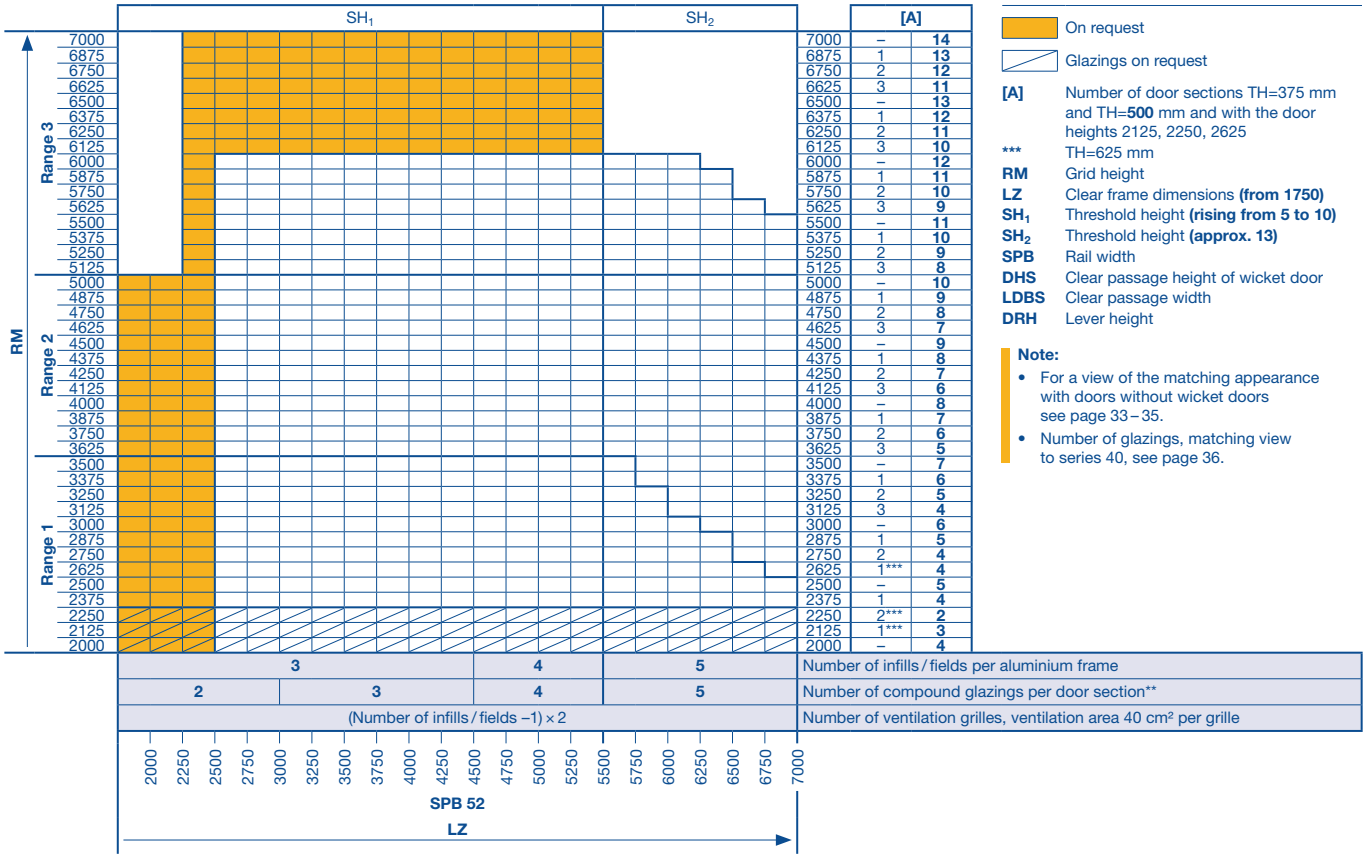

On request

Glazings on request

[A] Number of door sections TH=375 mm and TH=**500** mm and with the door heights 2125, 2250, 2625

******* TH=625 mm

RM Grid height

LZ Clear frame dimensions **(from 1750)**

SH_1 Threshold height **(rising from 5 to 10)**

SH_2 Threshold height **(approx. 13)**

SPB Rail width

DHS Clear passage height of wicket door

LDBS Clear passage width

DRH Lever height

Note:
- For a view of the matching appearance with doors without wicket doors see page 33 – 35.
- Number of glazings, matching view to series 40, see page 36.

Sectional Door SPU F42
Double-Skinned Steel Sections

500 mm high
Micrograin

External views

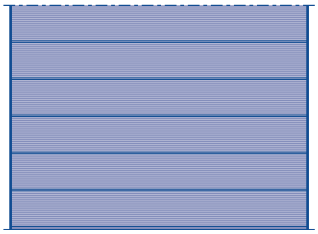

Glazing frame

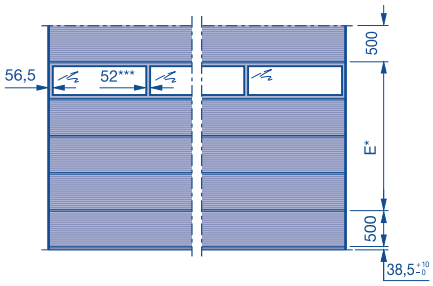

Compound glazing type A

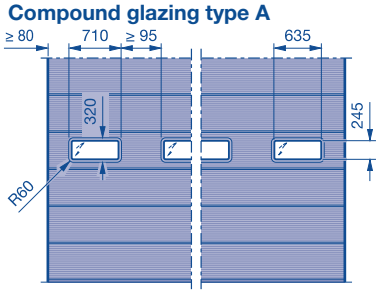

Compound glazing type D

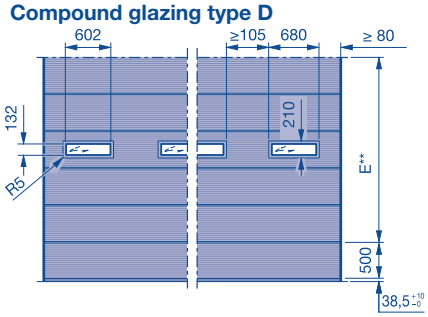

E* Fitting area for frame 500 with glazing
E** Fitting area for compound glazing
*** Optionally with wide rail extrusions (91 mm)

Size range

In the size range shown, any door width can be manufactured in 10-mm increments and any door height in the 500-mm grid, taking the min. ceiling height into account. Intermediate heights using aluminium glazing frames or shortened top door section with 500-mm ribbing grid are possible.

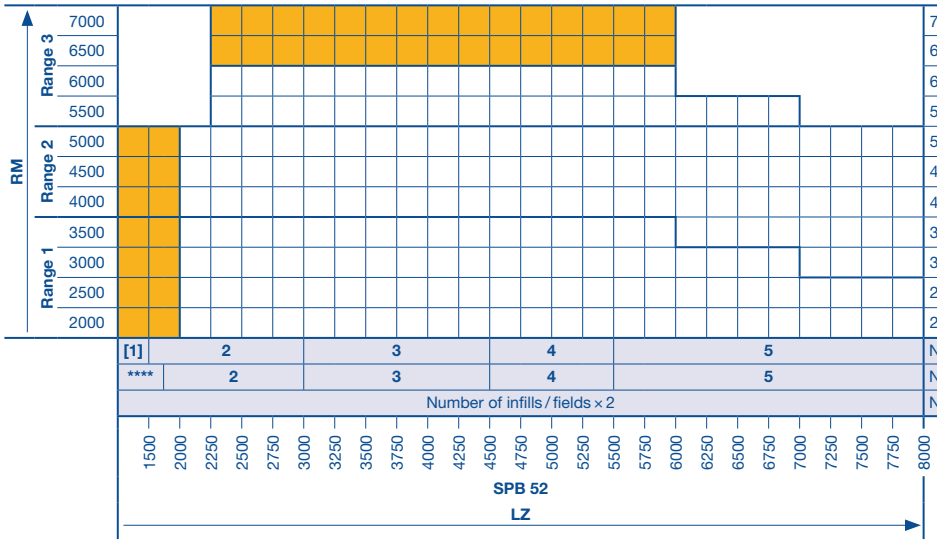

	[A]	[B]
7000	14	up to 6750 = 13
6500	13	up to 6250 = 12
6000	12	up to 5750 = 11
5500	11	up to 5250 = 10
5000	10	up to 4750 = 9
4500	9	up to 4250 = 8
4000	8	up to 3750 = 7
3500	7	up to 3250 = 6
3000	6	up to 2750 = 5
2500	5	up to 2250 = 4
2000	4	4

Number of infills / fields per aluminium frame
Number of compound glazings per door section
Number of ventilation grilles, ventilation area 40 cm² per grille

Notes:
- Glazing frame as thermo version only up to 7000 mm wide.
- For a view of the matching appearance with doors with wicket doors see page 33 – 35.
- Number of glazings, matching view to series 40, see page 36.

On request

[1] 1 → 1360, on request → 1740
[A] Number of door sections TH = 500 mm
[B] Number of door sections for intermediate heights

RM Grid height
LZ Clear frame dimensions **(from 1200)**
→ Up to LZ
SPB Rail width

**** See table 1 on page 10

Sectional Door SPU F42
With Wicket Door and Threshold Rail

Double-skinned steel sections
500 mm high, Micrograin

External view

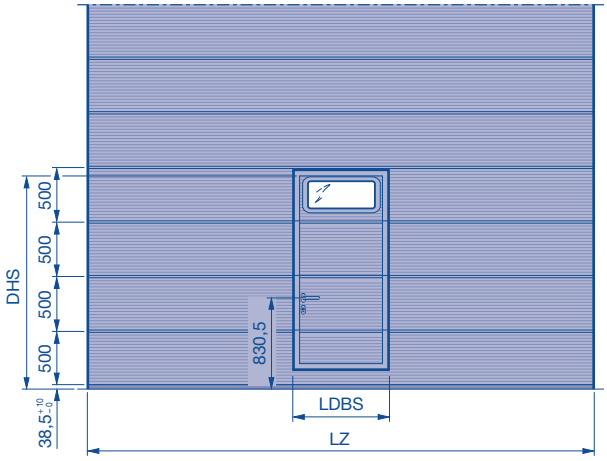

*****Note on fitting compound glazings:**
For door widths from 1750 – 3000 mm, a compound glazing can **only** be fitted into the wicket door. No compound glazing can be fitted to the left or right of the wicket door.

Clear passage width (LDBS) = 940 mm*

* For a door width of 1750 - 1840 mm, the clear passage width is 833 mm.

Grid height	Clear passage height of wicket door (DHS)
All grid heights	1955

Size range

In the size range shown, any door width can be manufactured in 10-mm increments and any door height in the 500-mm grid, taking the min. ceiling height into account. Intermediate heights from the fifth door section using aluminium glazing frames or adjusted top door section above wicket door are possible!

RM		SH₁	[A]	[B]
Range 3	7000		14	up to 6750 = 13
	6500		13	up to 6250 = 12
	6000		12	up to 5750 = 11
	5500		11	up to 5250 = 10
Range 2	5000		10	up to 4750 = 9
	4500		9	up to 4250 = 8
	4000		8	up to 3750 = 7
Range 1	3500		7	up to 3250 = 6
	3000		6	up to 2750 = 5
	2500		5	up to 2250 = 4
	2000		4	4

3 / 4		Number of infills / fields per aluminium frame
2 / 3 / 4		Number of compound glazings per door section**
(Number of infills / fields – 1) × 2		Number of ventilation grilles, ventilation area 40 cm² per grille

2000 2250 2500 2750 3000 3250 3500 3750 4000 4250 4500 4750 5000 5250 5500

SPB 52

LZ

Note:
- For a view of the matching appearance with doors without wicket doors see page 33 – 35.
- Number of glazings, matching view to series 40, see page 36.

On request

[A] Number of door sections TH = 500 mm
[B] Number of door sections for intermediate heights
RM Grid height

LZ Clear frame dimensions **(from 1750)**
SH₁ Threshold height **(200)**
SPB Rail width
DHS Clear passage height of wicket door

LDBS Clear passage width

Sectional Door SPU F42
With Wicket Door with Trip-Free Threshold

Double-skinned steel sections
500 mm high, Micrograin

External view

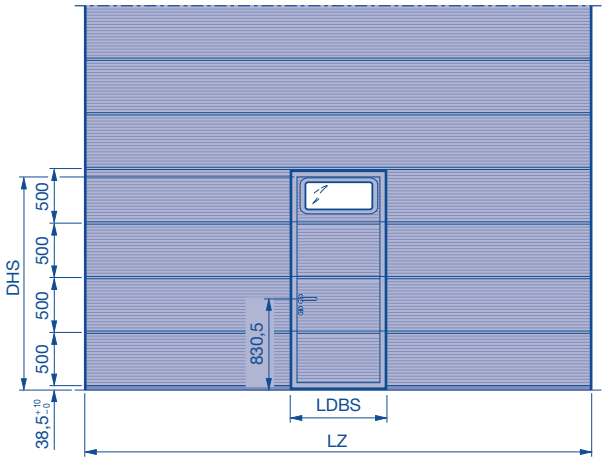

*****Note on fitting compound glazings:**
For door widths from 1750 – 3000 mm, a compound glazing can **only** be fitted into the wicket door. No compound glazing can be fitted to the left or right of the wicket door.

Clear passage width (LDBS) = 940 mm*
* For a door width of 1750 - 1840 mm, the clear passage width is 833 mm.

Grid height	Clear passage height of wicket door (DHS)
2000	1875
All other grid heights	1955

Size range

In the size range shown, any door width can be manufactured in 10-mm increments and any door height in the 500-mm grid, taking the min. ceiling height into account. Intermediate heights from the fifth door section using aluminium glazing frames or adjusted top door section above wicket door are possible!

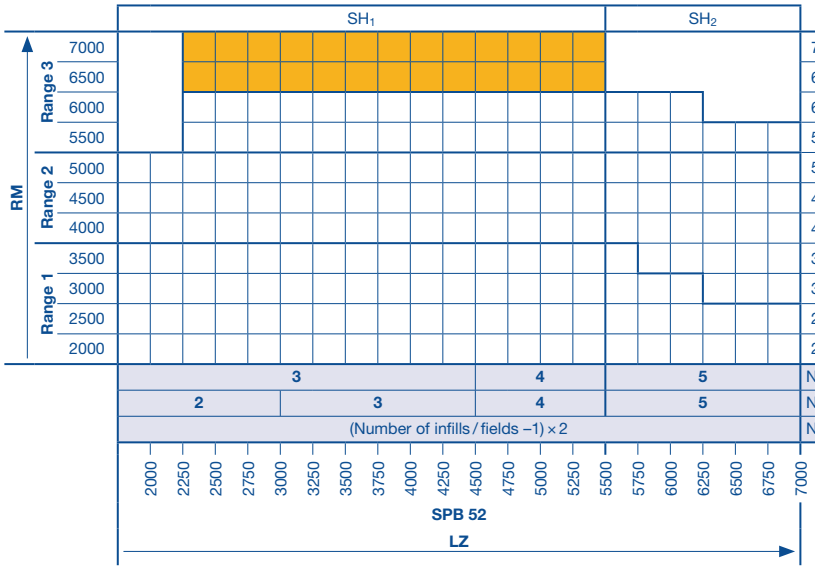

	[A]	[B]
7000	14	up to 6750 = 13
6500	13	up to 6250 = 12
6000	12	up to 5750 = 11
5500	11	up to 5250 = 10
5000	10	up to 4750 = 9
4500	9	up to 4250 = 8
4000	8	up to 3750 = 7
3500	7	up to 3250 = 6
3000	6	up to 2750 = 5
2500	5	up to 2250 = 4
2000	4	4

3 4 5	Number of infills / fields per aluminium frame
2 3 4 5	Number of compound glazings per door section**
(Number of infills / fields –1) × 2	Number of ventilation grilles, ventilation area 40 cm² per grille

Note:
- For a view of the matching appearance with doors without wicket doors see page 33 – 35.
- Number of glazings, matching view to series 40, see page 36.

On request

[A] Number of door sections TH = 500 mm
[B] Number of door sections for intermediate heights
RM Grid height

LZ Clear frame dimensions **(from 1750)**
SH_1 Threshold height **(rising from 5 to 10)**
SH_2 Threshold height **(approx. 13)**
SPB Rail width
DHS Clear passage height of wicket door

LDBS Clear passage width

Glazing Heights for Matching External Appearance SPU F42 Stucco-Textured

(Centre of window from FFL)

Door section heights 500, 625 and 750 mm

Glazing heights for matching external appearance of compound windows type A and D.

RM	Glazing heights (centre of window from FFL)											
	1155	1280	1530	1655	1780	1905	2030	2155	2280	2405	2530	2655
7000		X			X				X			
6875	X	X		X	X			X	X			X
6750	X	X			X		X				X	X
6625	X	X		X	X	X	X			X	X	X
6500		X			X				X			
6375	X	X		X	X			X	X			X
6250	X	X	X	X	X		X	X	X		X	X
6125	X	X	X	X	X	X	X	X	X	X	X	X
6000		X			X							
5875	X	X		X	X							X
5750	X	X	X	X	X		X		X		X	X
5625	X	X	X	X	X	X	X	X	X	X	X	X
5500		X			X				X			
5375	X	X		X	X			X	X			X
5250	X	X			X		X				X	X
5125	X	X		X	X	X	X			X	X	X
5000		X			X				X			
4875	X	X		X	X			X	X			X
4750	X	X	X	X	X		X	X	X		X	X
4625	X	X	X	X	X	X		X	X	X	X	
4500		X			X							
4375	X	X		X	X							X
4250	X	X	X	X	X	X	X		X	X	X	X
4125	X	X	X	X	X	X	X	X	X	X	X	X
4000		X			X				X			
3875	X			X	X			X	X			
3750	X	X			X		X				X	X
3625	X	X		X	X	X	X			X	X	X
3500		X			X				X			
3375	X	X		X	X				X			
3250	X		X	X	X			X	X			
3125			X	X				X				
3000		X			X							
2875	X	X		X	X							X
2750	X	X	X	X	X						X	
2625	X		X	X						X		
2500									X			
2375				X				X				
2250	X	X					X					
2125	X					X						
2000					X							
1875				X								

RM Grid height

Calculating the Glazing Heights

(Centre of window from FFL)

Door section heights 500, 625 and 750 mm

Calculating the glazing heights for compound windows type A, type D and type E.
See door type for number of door sections and glazing areas. The illustrations correspond to a section depth of 42 mm.

Door section height 750 mm

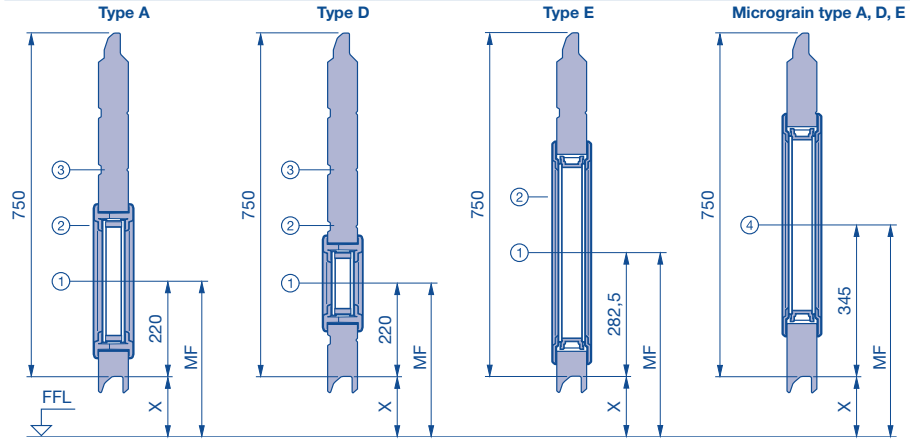

Glazing height type A and D
① = x + 220
② = x + 220 + 125
③ = x + 220 + 250
④ = x + 345

Glazing height type E
① = x + 282.5
② = x + 282.5 + 125
④ = x + 345

x = Sum of door section heights + 60 mm from FFL

Door section height 625 mm

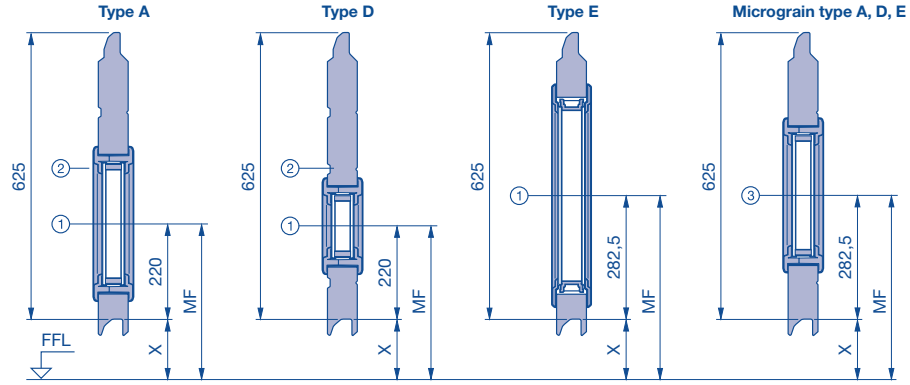

Glazing height type A and D
① = x + 220
② = x + 220 + 125
③ = x + 282.5

Glazing height type E
① = x + 282.5
③ = x + 282.5

x = Sum of door section heights + 60 mm from FFL

Door section height 500 mm

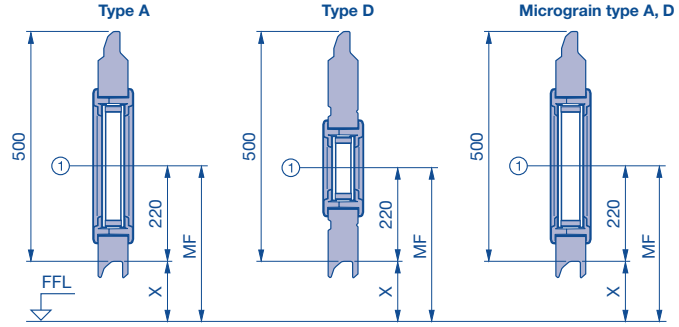

Glazing height type A and D
① = x + 220

Glazing height type E
Not possible!

x = Sum of door section heights + 60 mm from FFL

Calculation example

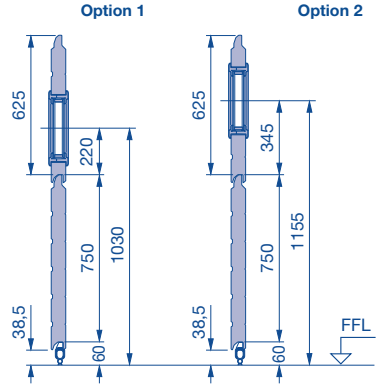

Given:

- Door type SPU F42; grid height (RM) = 3250 mm; glazing type A; position see below number of door sections (see table of door types)
- Door section 625 mm = 4 units
- Door section 750 mm = 1 unit

Option	Door section / position	Glazing height
1	in 2nd door section 625 mm at position 1	750 + 60 + 220 = 1030 mm from FFL
2	in 2nd door section 625 mm at position 2	750 + 60 + 220 + 125 = 1155 mm from FFL
3	in 3rd door section 625 mm at position 1	750 + 625 + 60 + 220 = 1655 mm from FFL
4	in 3rd door section 625 mm at position 2	750 + 625 + 60 + 220 + 125 = 1780 mm from FFL
etc.		

MF Centre of window from FFL

Sectional Door APU F42 / APU F42 Thermo

Aluminium extrusions

Double-skinned bottom section

External view

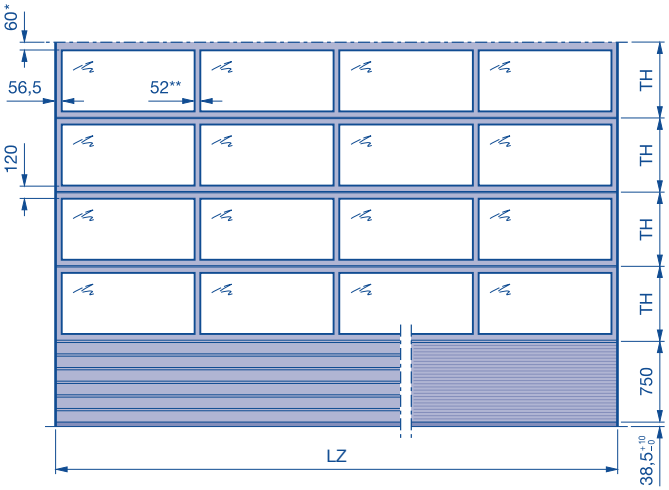

$$TH = \frac{\text{Door height} - \text{bottom section height} - 35}{\text{Number of door section frames}}$$

* On request 120 mm, so as to match the appearance of a sectional door with wicket door with trip-free threshold with the same door height.

** Optionally with wide rail extrusions (91 mm)

Note:

- When using a shaft operator (installation example 5), the door lock is always on the side opposite the operator
- For a view of the matching appearance with doors with wicket doors see page 33 – 35.
- Number of glazings, matching view to series 40, see page 36.

Size range

In the size range shown, any door width can be produced in 10-mm increments. Observe min. ceiling height.

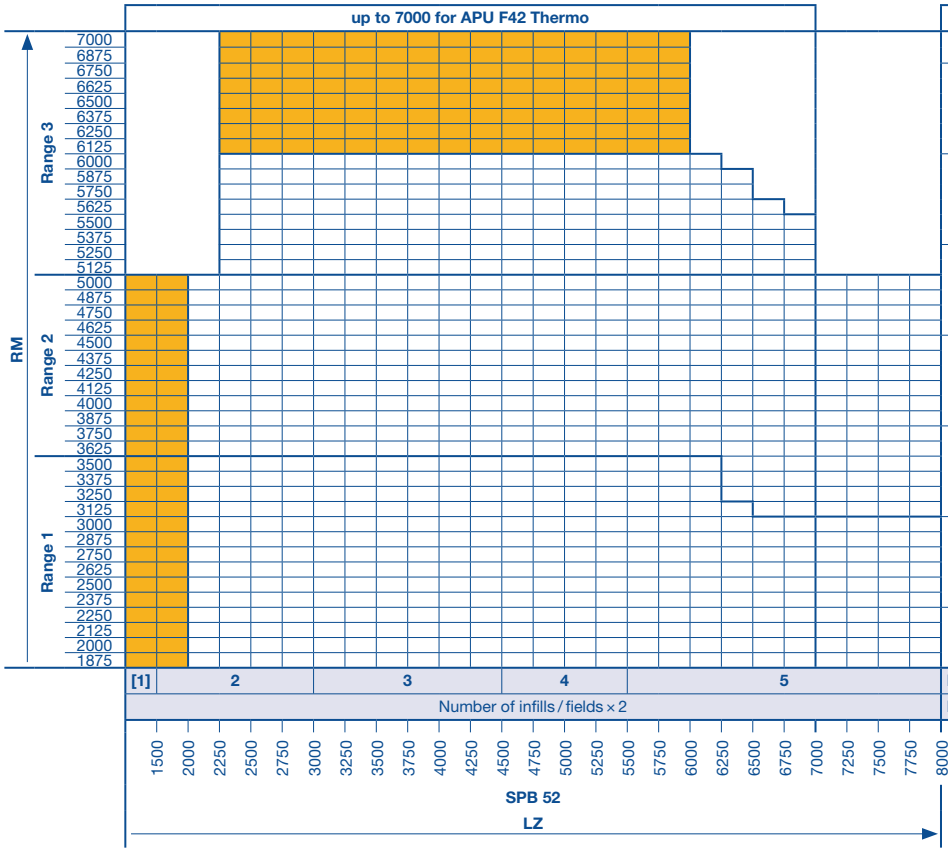

n	[A]	n	[C]	n	[D]
9	7000 6790	8	7000	8	7000 6790
8	6780 6040	7	6290 6280	7	6780 6040
7	6030 5290	6	5540 5530	6	6030 5290
6	5280 4540	5	4790 4780	5	5280 4540
5	4530 3790	4	4040 4030	4	4530 3790
4	3780 3040	3	3290 3280	3	3780 3040
3	3030 2290	2	2540 2530	2	3030 2290
2	2280 1875		1875	1	2280 1875

Number of infills / fields per aluminium frame

Number of ventilation grilles, ventilation area 40 cm² per grille

On request

[1] 1 → 1360, on request → 1740

Number of door section frames:

[A] Bottom section height 750 mm (standard)
[C] Bottom section height 1000 mm
[D] Bottom section height 1500 mm
RM Grid height

LZ Clear frame dimensions **(from 1200)**
→ Up to LZ
SPB Rail width
n Number of aluminium frames
TH Door section height

Sectional Door APU F42 / APU F42 With Wicket Door and Threshold Rail

Aluminium extrusions

Bottom section height 750

External view

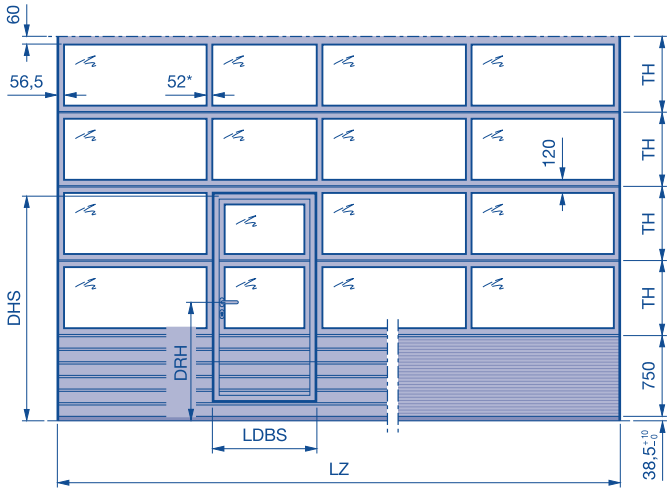

Lever height on request

Clear passage width (LDBS) = 940 mm**

Clear passage height of wicket door (DHS) =
$n_1 \times TH + (\text{bottom section height} - 45)$

n_1 Number of frames in the wicket door
* Optionally with wide rail extrusions (91 mm)
** For a door width of 1750 – 1840 mm, the clear passage width is 833 mm.

Note:

- When using a shaft operator (installation example 5), the door lock is always on the side opposite the operator
- Micrograin version only up to door width ≤ 5500 mm.
- For a view of the matching appearance with doors without wicket doors see page 33 – 35.
- Number of glazings, matching view to series 40, see page 36.

Size range

In the size range shown, any door width can be produced in 10-mm increments. Observe min. ceiling height.

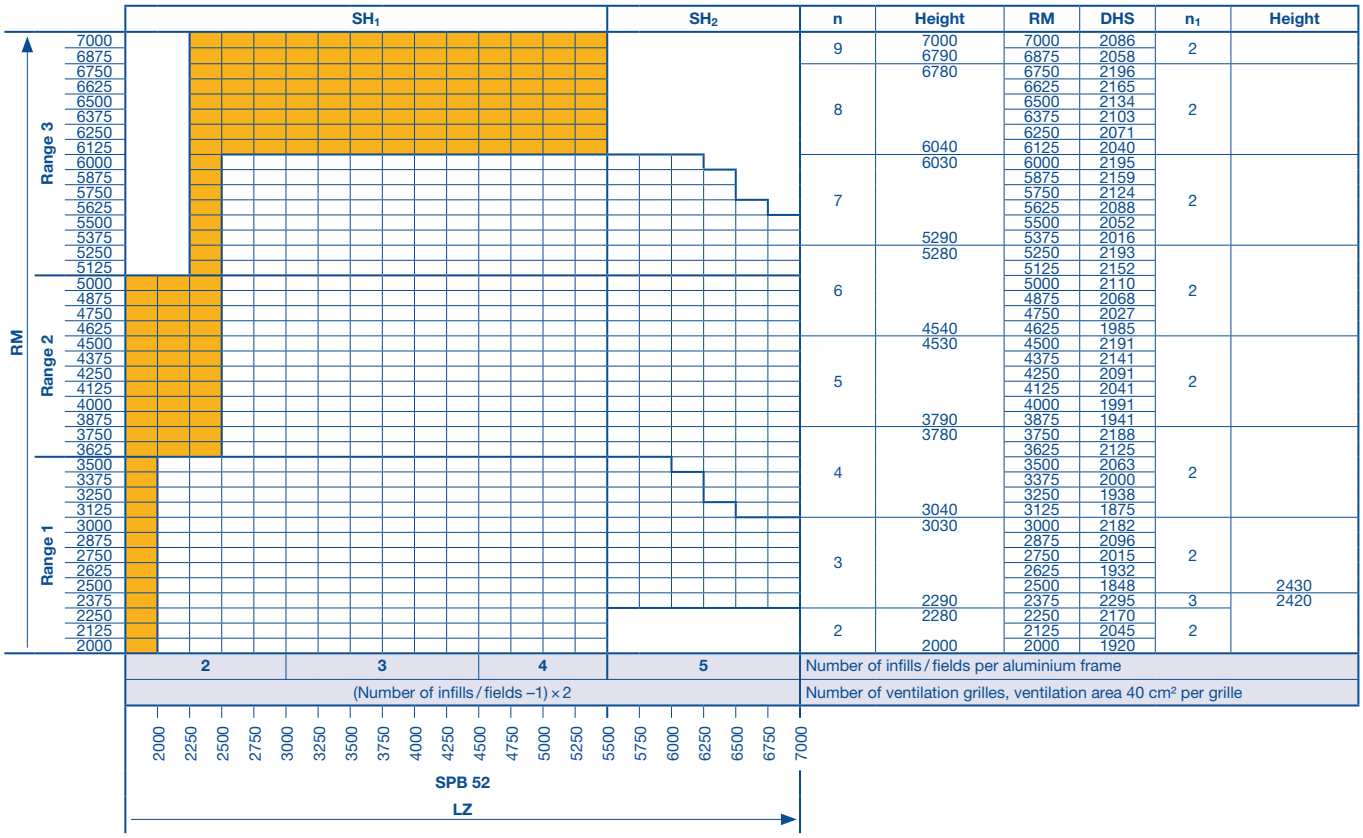

n	Height	RM	DHS	n_1	Height
9	7000	7000	2086	2	
	6790	6875	2058		
8	6780	6750	2196	2	
		6625	2165		
		6500	2134		
		6375	2103		
		6250	2071		
	6040	6125	2040		
7	6030	6000	2195	2	
		5875	2159		
		5750	2124		
		5625	2088		
		5500	2052		
	5290	5375	2016		
6	5280	5250	2193	2	
		5125	2152		
		5000	2110		
		4875	2068		
		4750	2027		
	4540	4625	1985		
5	4530	4500	2191	2	
		4375	2141		
		4250	2091		
		4125	2041		
		4000	1991		
	3790	3875	1941		
4	3780	3750	2188	2	
		3625	2125		
		3500	2063		
		3375	2000		
		3250	1938		
	3040	3125	1875		
3	3030	3000	2182	2	
		2875	2096		
		2750	2015		
		2625	1932		
		2500	1848		2430
	2290	2375	2295	3	2420
2	2280	2250	2170	2	
		2125	2045		
	2000	2000	1920		

Number of infills / fields per aluminium frame

Number of ventilation grilles, ventilation area 40 cm² per grille

On request

DHS Clear passage height of wicket door
DRH Lever height
LZ Clear frame dimensions **(from 1750)**
RM Grid height
SPB Rail width

SH_1 Threshold height **(200)**
SH_2 Threshold height **(325)**
n Number of aluminium frames
n_1 Number of aluminium frames in the wicket door
TH Door section height

Sectional Door APU F42 / APU F42 Thermo with Wicket Door with Trip-Free Threshold

Aluminium extrusions

Bottom section height 750

External view

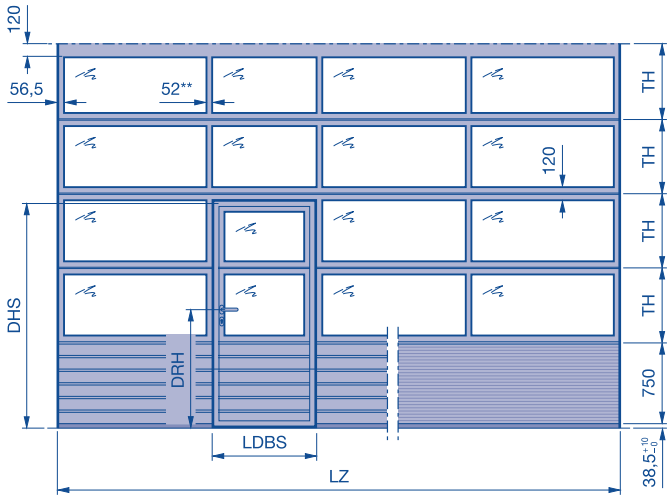

Lever height on request

Clear passage width (LDBS) = 940 mm***

Clear passage height of wicket door (DHS)=
$n_1 \times TH$ + (bottom section height – 45*)

n_1 Number of frames in the wicket door
* Attention: If there is no frame above the wicket door, then – 90 instead of – 45.
** Optionally with wide rail extrusions (91 mm)
*** For a door width of 1750 – 1840 mm, the clear passage width is 833 mm.

Note:
- When using a shaft operator (installation example 5), the door lock is always on the side opposite the operator
- For a view of the matching appearance with doors without wicket doors see page 33 – 35.
- Number of glazings, matching view to series 40, see page 36.

Size range

In the size range shown, any door width can be produced in 10-mm increments. Observe min. ceiling height.

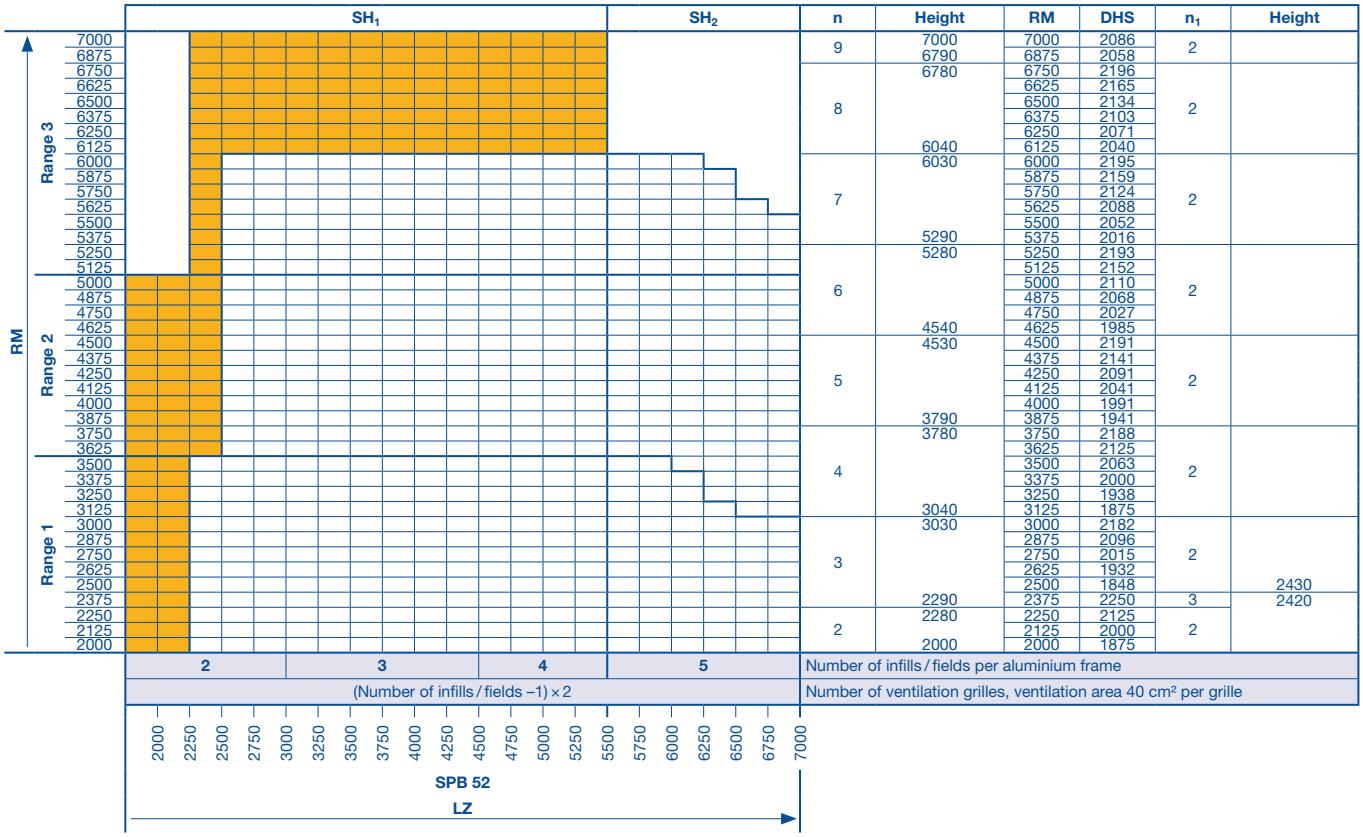

RM	SH1	SH2	n	Height	RM	DHS	n1	Height
Range 3	7000		9	7000	7000	2086	2	
	6875			6790	6875	2058		
	6750		8	6780	6750	2196	2	
	6625				6625	2165		
	6500				6500	2134		
	6375				6375	2103		
	6250				6250	2071		
	6125			6040	6125	2040		
	6000		7	6030	6000	2195	2	
	5875				5875	2159		
	5750				5750	2124		
	5625				5625	2088		
	5500				5500	2052		
	5375			5290	5375	2016		
	5250		6	5280	5250	2193	2	
	5125				5125	2152		
Range 2	5000				5000	2110		
	4875				4875	2068		
	4750				4750	2027		
	4625			4540	4625	1985		
	4500		5	4530	4500	2191	2	
	4375				4375	2141		
	4250				4250	2091		
	4125				4125	2041		
	4000				4000	1991		
	3875			3790	3875	1941		
	3750		4	3780	3750	2188	2	
	3625				3625	2125		
Range 1	3500				3500	2063		
	3375				3375	2000		
	3250				3250	1938		
	3125			3040	3125	1875		
	3000		3	3030	3000	2182	2	
	2875				2875	2096		
	2750				2750	2015		
	2625				2625	1932		
	2500				2500	1848		2430
	2375			2290	2375	2250	3	2420
	2250		2	2280	2250	2125	2	
	2125				2125	2000		
	2000			2000	2000	1875		

2	3	4	5
(Number of infills / fields –1) × 2			

Number of infills / fields per aluminium frame
Number of ventilation grilles, ventilation area 40 cm² per grille

2000 2250 2500 2750 3000 3250 3500 3750 4000 4250 4500 4750 5000 5250 5500 5750 6000 6250 6500 6750 7000

SPB 52
LZ

On request

DHS Clear passage height of wicket door
LZ Clear frame dimensions **(from 1750)**
DRH Lever height
RM Grid height
SPB Rail width

SH_1 Threshold height **(rising from 5 to 10)**
SH_2 Threshold height **(approx. 13)**
n Number of aluminium frames
n_1 Number of aluminium frames in the wicket door
TH Door section height

Sectional Door APU F42 / APU F42 With Wicket Door and Threshold Rail

Aluminium extrusions

Bottom section height 1500

External view

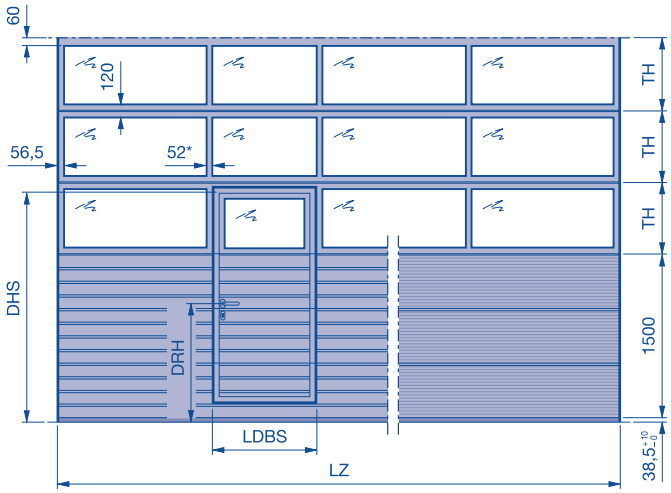

Lever height on request

Clear passage width (LDBS) = 940 mm**

Clear passage height wicket door (DHS) =
$n_1 \times TH + (\text{bottom section height} - 45)$

n_1 Number of frames in the wicket door
* Optionally with wide rail extrusions (91 mm)
** For a door width of 1750 – 1840 mm, the clear passage width is 833 mm.

Note:
- When using a shaft operator (installation example 5), the door lock is always on the side opposite the operator
- Micrograin version only up to door width ≤ 5500 mm.
- For a view of the matching appearance with doors without wicket doors see page 33 – 35.
- Number of glazings, matching view to series 40, see page 36.

Size range

In the size range shown, any door width can be produced in 10-mm increments. Observe min. ceiling height.

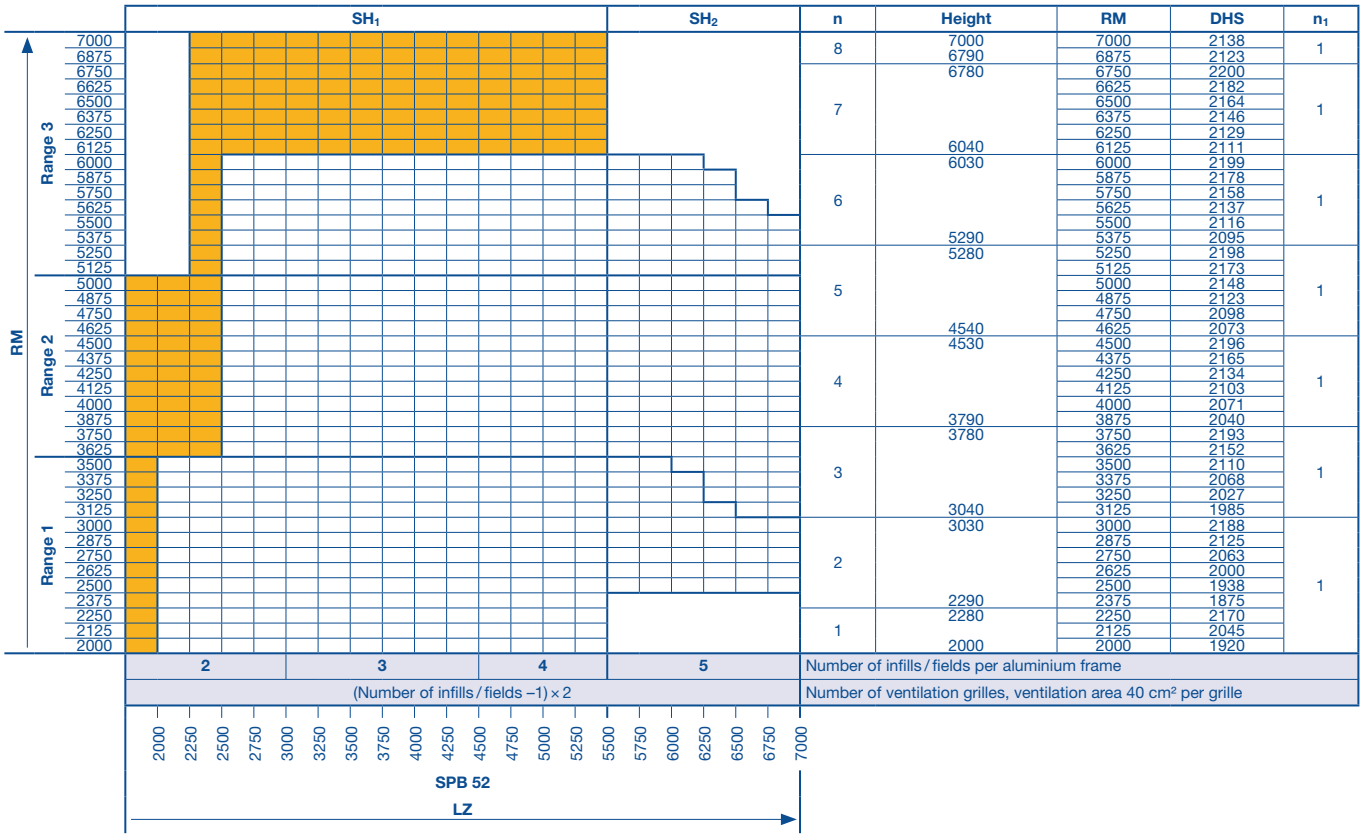

n	Height	RM	DHS	n_1
8	7000	7000	2138	1
	6790	6875	2123	
7	6780	6750	2200	1
		6625	2182	
		6500	2164	
		6375	2146	
		6250	2129	
	6040	6125	2111	
6	6030	6000	2199	1
		5875	2178	
		5750	2158	
		5625	2137	
		5500	2116	
	5290	5375	2095	
5	5280	5250	2198	1
		5125	2173	
		5000	2148	
		4875	2123	
		4750	2098	
	4540	4625	2073	
4	4530	4500	2196	1
		4375	2165	
		4250	2134	
		4125	2103	
		4000	2071	
	3790	3875	2040	
3	3780	3750	2193	1
		3625	2152	
		3500	2110	
		3375	2068	
		3250	2027	
	3040	3125	1985	
2	3030	3000	2188	1
		2875	2125	
		2750	2063	
		2625	2000	
		2500	1938	
	2290	2375	1875	
1	2280	2250	2170	
		2125	2045	
	2000	2000	1920	

Number of infills / fields per aluminium frame

Number of ventilation grilles, ventilation area 40 cm² per grille

On request

DHS Clear passage height of wicket door
DRH Lever height
LZ Clear frame dimensions **(from 1750)**
RM Grid height
SPB Rail width

SH_1 Threshold height **(200)**
SH_2 Threshold height **(325)**
n Number of aluminium frames
n_1 Number of aluminium frames in the wicket door
TH Door section height

Sectional Door APU F42 / APU F42 Thermo with Wicket Door with Trip-Free Threshold

Aluminium extrusions

Bottom section height 1500

External view

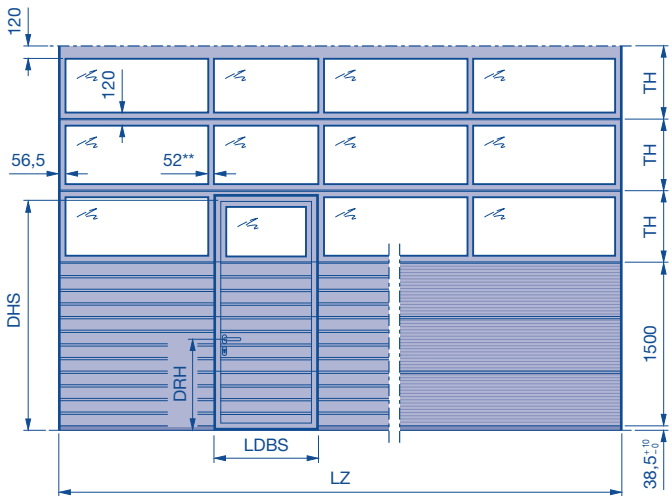

Lever height (DRH):

LZ ≤ 6000 = 1080.5

LZ > 6000 = 830.5

Clear passage width (LDBS) = 940 mm***

Clear passage height of wicket door (DHS) =
n_1 × TH + (bottom section height – 45*)

n_1 Number of frames in the wicket door
* Attention: If there is no frame above the wicket door, then – 90 instead of – 45.
** Optionally with wide rail extrusions (91 mm)
*** For a door width of 1750 – 1840 mm, the clear passage width is 833 mm.

Note:

- When using a shaft operator (installation example 5), the door lock is always on the side opposite the operator
- For a view of the matching appearance with doors without wicket doors see page 33 – 35.
- Number of glazings, matching view to series 40, see page 36.

Size range

In the size range shown, any door width can be produced in 10-mm increments. Observe min. ceiling height.

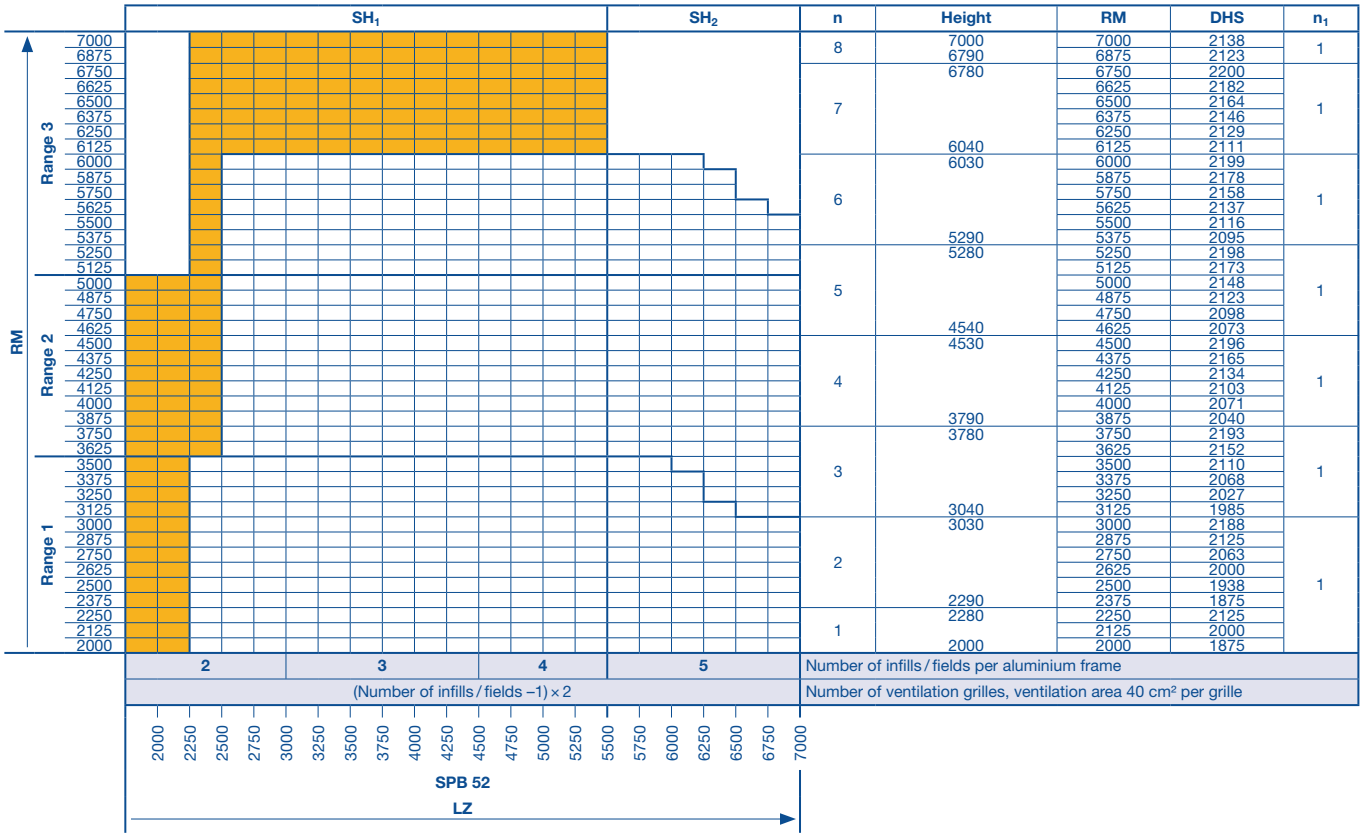

n	Height	RM	DHS	n_1
8	7000	7000	2138	1
	6790	6875	2123	
7	6780	6750	2200	1
		6625	2182	
		6500	2164	
		6375	2146	
		6250	2129	
	6040	6125	2111	
6	6030	6000	2199	1
		5875	2178	
		5750	2158	
		5625	2137	
		5500	2116	
	5290	5375	2095	
5	5280	5250	2198	1
		5125	2173	
		5000	2148	
		4875	2123	
		4750	2098	
	4540	4625	2073	
4	4530	4500	2196	1
		4375	2165	
		4250	2134	
		4125	2103	
		4000	2071	
	3790	3875	2040	
3	3780	3750	2193	1
		3625	2152	
		3500	2110	
		3375	2068	
		3250	2027	
	3040	3125	1985	
2	3030	3000	2188	1
		2875	2125	
		2750	2063	
		2625	2000	
		2500	1938	
	2290	2375	1875	
1	2280	2250	2125	
		2125	2000	
	2000	2000	1875	

Number of infills / fields per aluminium frame

Number of ventilation grilles, ventilation area 40 cm² per grille

On request

DHS Clear passage height of wicket door
LZ Clear frame dimensions **(from 1750)**
RM Grid height
SPB Rail width

SH_1 Threshold height **(rising from 5 to 10)**
SH_2 Threshold height **(approx. 13)**
n Number of aluminium frames
n_1 Number of aluminium frames in the wicket door
TH Door section height

Sectional Door APU F42 S-Line

Aluminium extrusions

Double-skinned bottom section

External view

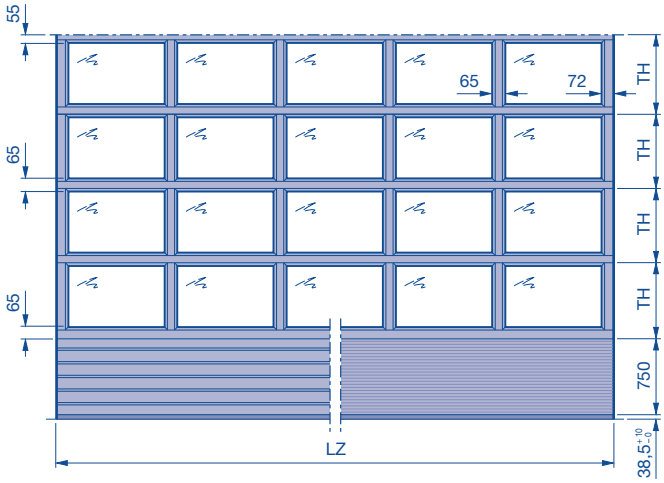

$$TH = \frac{\text{Door height} - \text{bottom section height} - 77}{\text{Number of door section frames}}$$

Note:
When using a shaft operator (installation example 5), the door lock is always on the side opposite the operator

Size range

In the size range shown, any door width can be produced in 10-mm increments. Observe min. ceiling height.

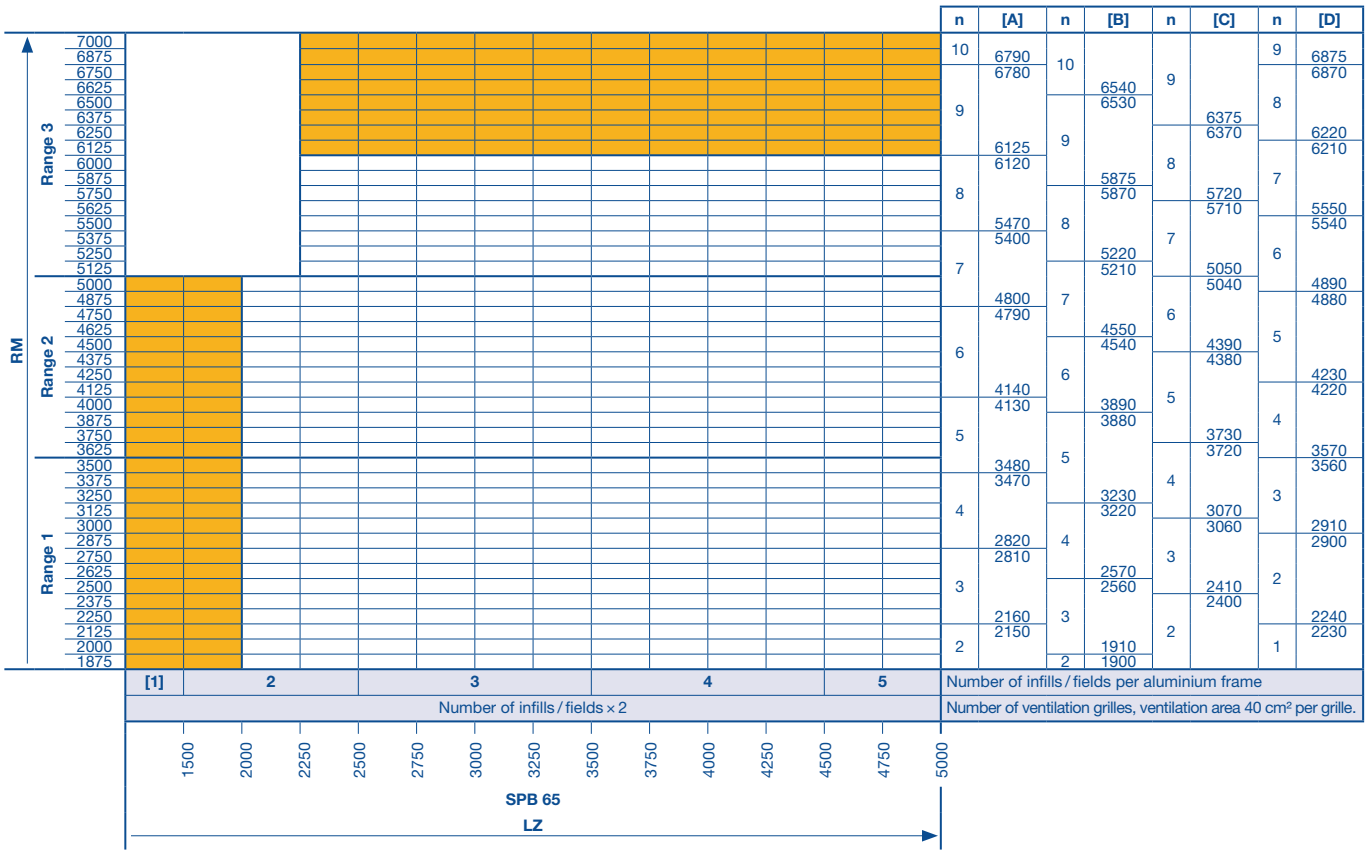

On request

[1] **1** → 1300

Number of door section frames:

[A] Bottom section height 750 mm (standard)
[B] Bottom section height 500 mm
[C] Bottom section height 1000 mm
[D] Bottom section height 1500 mm

RM Grid height
LZ Clear frame dimensions **(from 1200)**
→ Up to LZ
SPB Rail width
n Number of aluminium frames
TH Door section height

Sectional Door ALR F42 / ALR F42 Thermo

Door leaf made of standard aluminium extrusions or aluminium extrusions with thermal break

External view

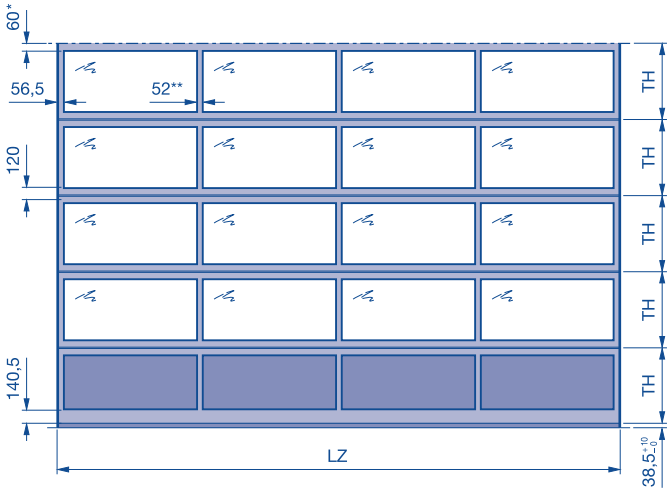

$$TH = \frac{\text{Door height} - 35}{\text{Number of door section frames}}$$

* On request 120 mm, so as to match the appearance of a sectional door with wicket door with trip-free threshold with the same door height.

** Optionally with wide rail extrusions (91 mm)

Note:

- When using a shaft operator (installation example 5), the door lock is always on the side opposite the operator
- For door widths from 5500 mm, diagonal struts are fitted into the bottom door section (not visible with closed infills).
- For a view of the matching appearance with doors with wicket doors see page 33 – 35.
- Number of glazings, matching view to series 40, see page 36.

Size range

In the size range shown, any door width can be produced in 10-mm increments. Observe min. ceiling height.

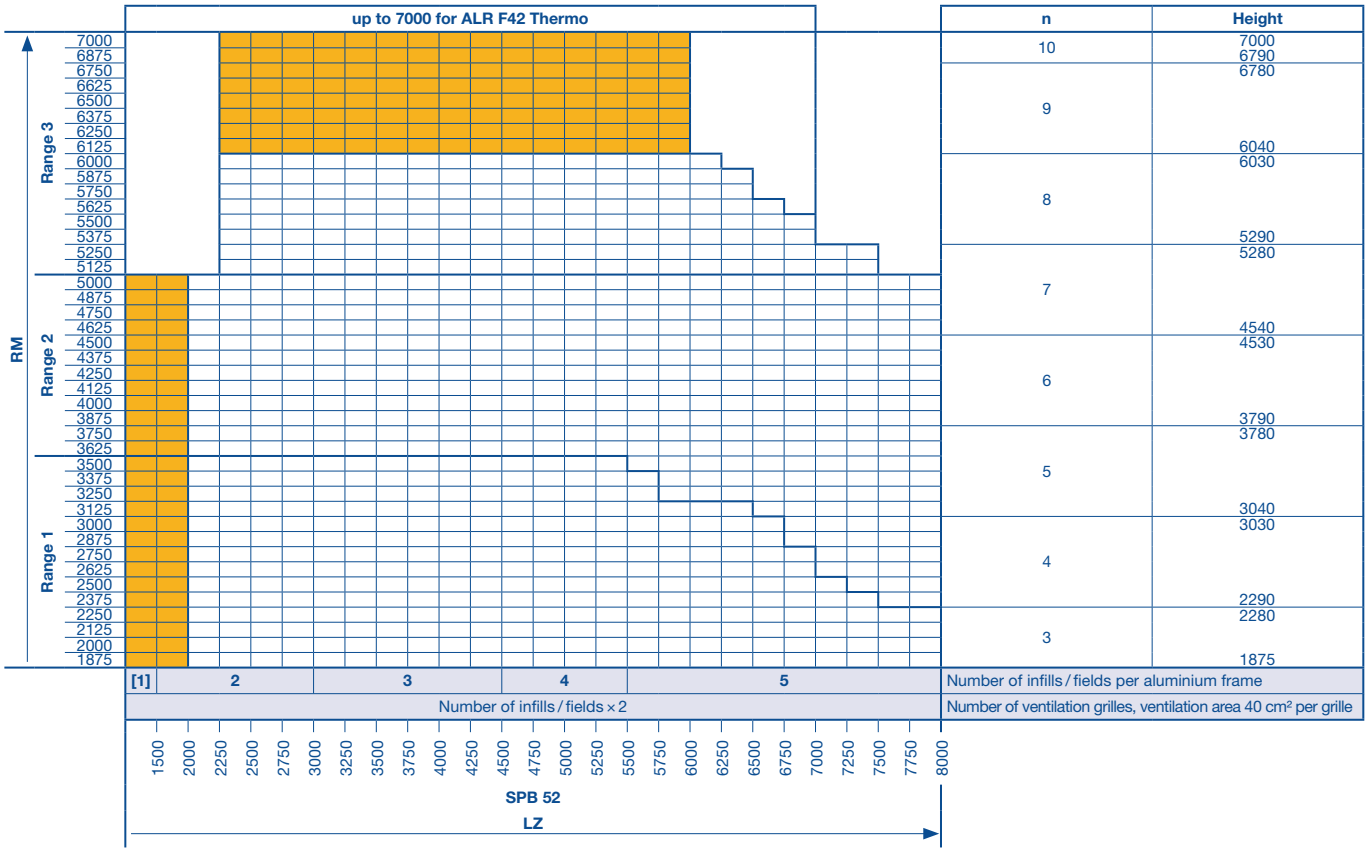

On request

[1] 1 → 1360, on request → 1740

RM Grid height

LZ Clear frame dimensions **(from 1200)**

→ Up to LZ

SPB Rail width

n Number of aluminium frames

TH Door section height

Sectional Door ALR F42 / ALR F42 Thermo With Wicket Door and Threshold Rail

External view

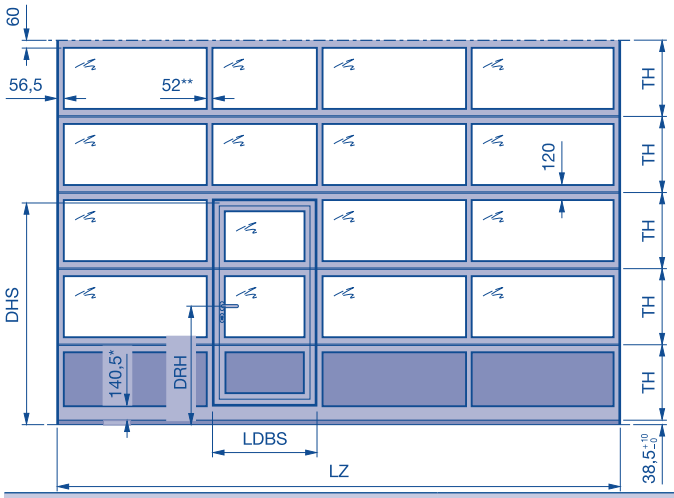

Lever height on request

Clear passage width (LDBS) = 940 mm***

Clear passage height wicket door (DHS)=n_1 × TH – 45

n_1 Number of frames in the wicket door
* 265.5 with SH_2
** Optionally with wide rail extrusions (91 mm)
*** For a door width of 1750 – 1840 mm, the clear passage width is 833 mm.

Note:
- When using a shaft operator (installation example 5), the door lock is always on the side opposite the operator
- For door widths from 5500 mm, diagonal struts are fitted into the bottom door section (not visible with closed infills).
- For a view of the matching appearance with doors without wicket doors see page 33 – 35.
- Number of glazings, matching view to series 40, see page 36.

Size range

In the size range shown, any door width can be produced in 10-mm increments. Observe min. ceiling height.

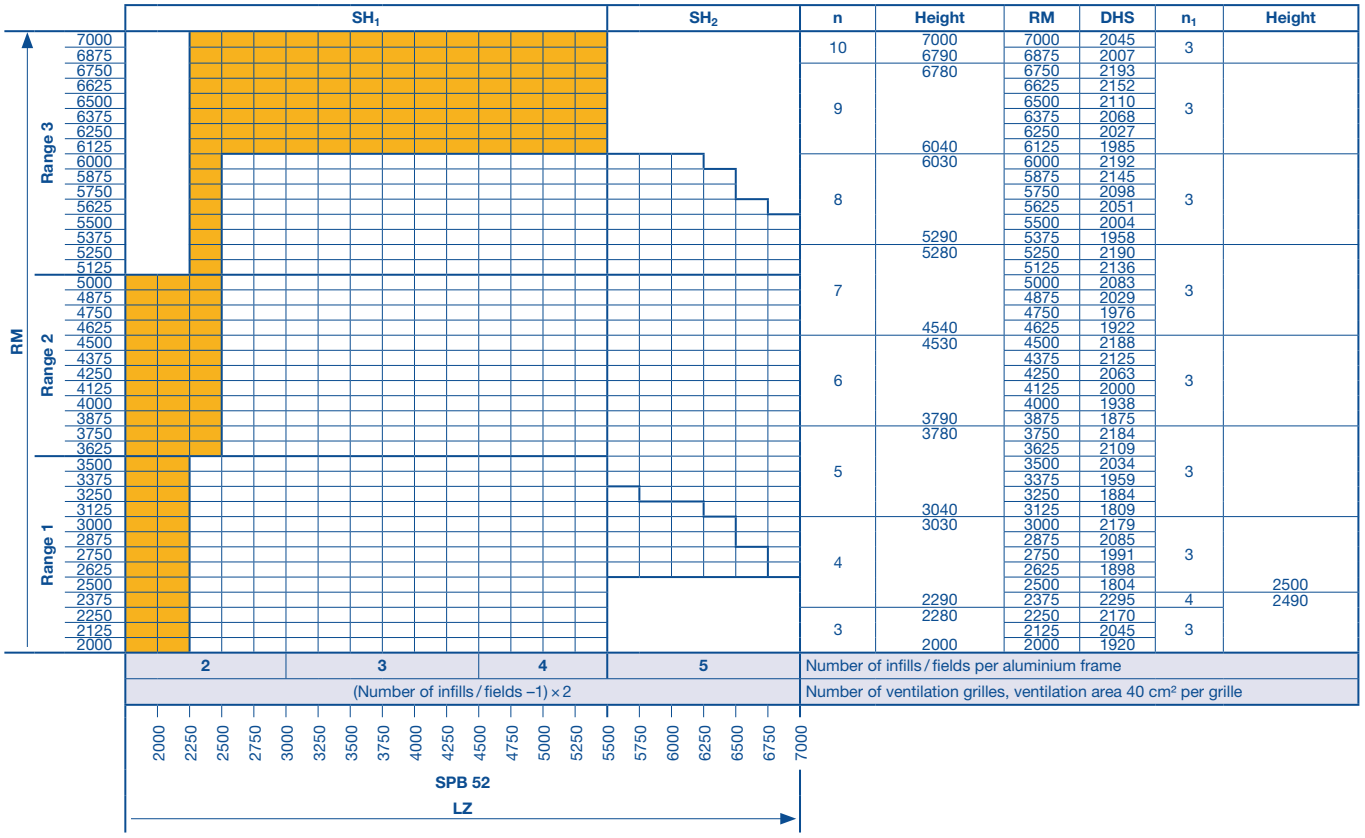

n	Height	RM	DHS	n_1	Height
10	7000	7000	2045	3	
	6790	6875	2007		
9	6780	6750	2193	3	
		6625	2152		
		6500	2110		
		6375	2068		
		6250	2027		
	6040	6125	1985		
8	6030	6000	2192	3	
		5875	2145		
		5750	2098		
		5625	2051		
		5500	2004		
	5290	5375	1958		
7	5280	5250	2190	3	
		5125	2136		
		5000	2083		
		4875	2029		
		4750	1976		
	4540	4625	1922		
6	4530	4500	2188	3	
		4375	2125		
		4250	2063		
		4125	2000		
		4000	1938		
	3790	3875	1875		
5	3780	3750	2184	3	
		3625	2109		
		3500	2034		
		3375	1959		
		3250	1884		
	3040	3125	1809		
4	3030	3000	2179	3	
		2875	2085		
		2750	1991		
		2625	1898		
		2500	1804		2500
	2290	2375	2295	4	2490
3	2280	2250	2170	3	
		2125	2045		
	2000	2000	1920		

Number of infills / fields per aluminium frame
Number of ventilation grilles, ventilation area 40 cm² per grille

On request

DHS Clear passage height of wicket door
DRH Lever height
LZ Clear frame dimensions **(from 1750)**
RM Grid height
SPB Rail width

SH_1 Threshold height **(181)**
SH_2 Threshold height **(306)**
n Number of aluminium frames
n_1 Number of aluminium frames in the wicket door
TH Door section height

Sectional Door ALR F42 / ALR F42 Thermo With Wicket Door with Trip-Free Threshold

External view

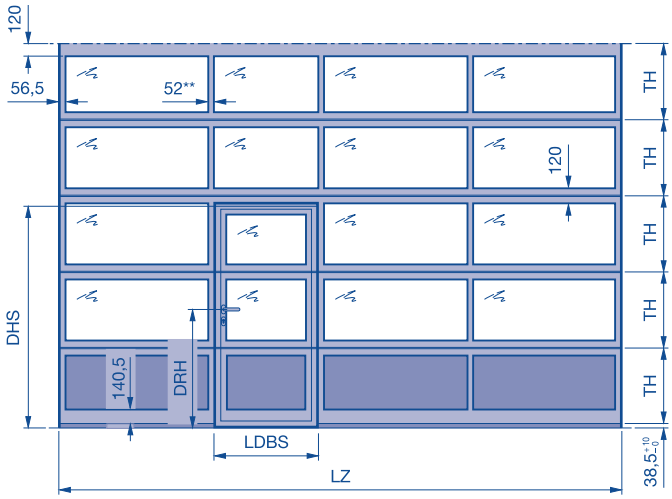

Lever height on request

Clear passage width (LDBS) = 940 mm***

Clear passage height wicket door (DHS) = $n_1 \times TH - 45^*$

n_1 Number of frames in the wicket door
* Attention: If there is no frame above the wicket door, then – 90 instead of – 45.
** Optionally with wide rail extrusions (91 mm)
*** For a door width of 1750 – 1840 mm, the clear passage width is 833 mm.

Note:
- When using a shaft operator (installation example 5), the door lock is always on the side opposite the operator
- For door widths from 5500 mm, diagonal struts are fitted into the bottom door section (not visible with closed infills).
- For a view of the matching appearance with doors without wicket doors see page 33 – 35.
- Number of glazings, matching view to series 40, see page 36.

Size range

In the size range shown, any door width can be produced in 10-mm increments. Observe min. ceiling height.

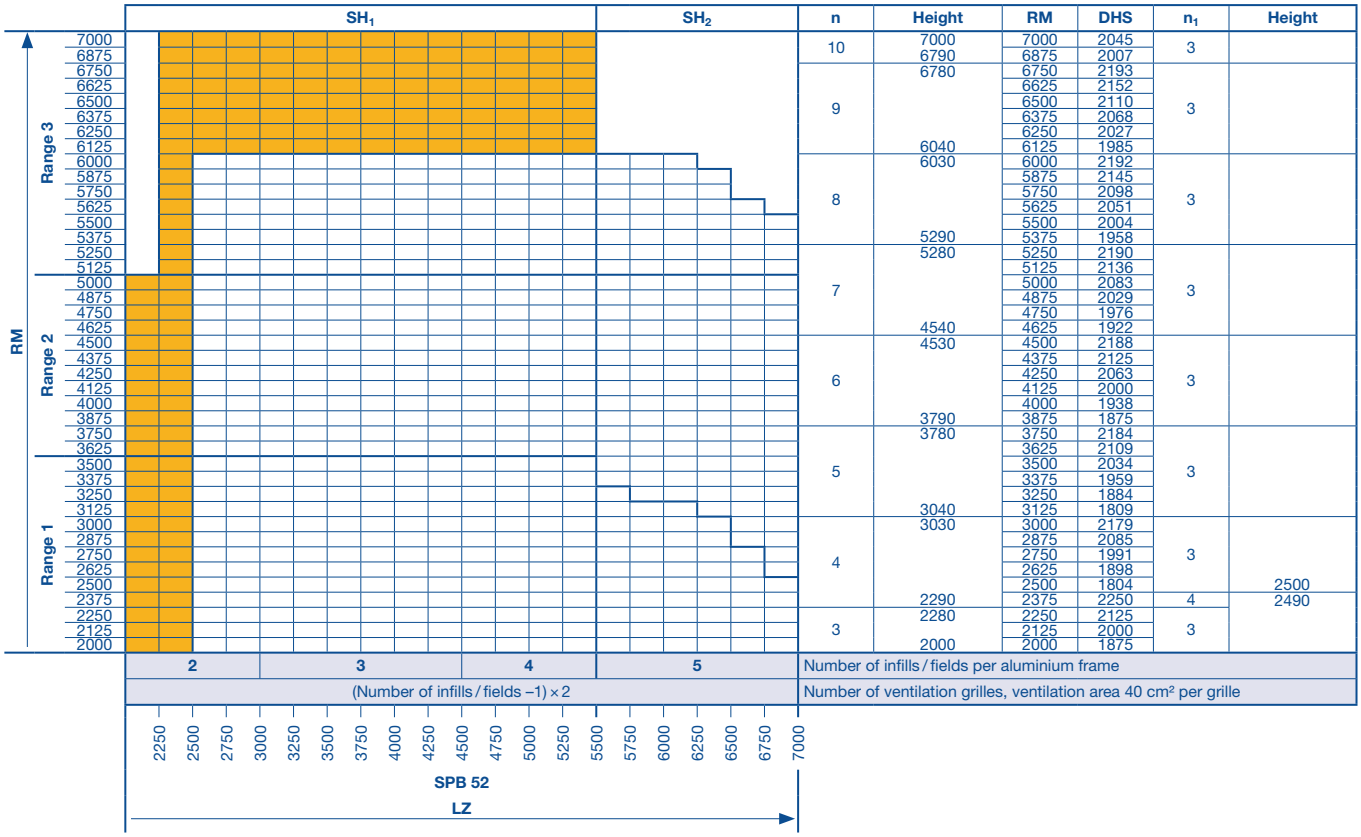

RM	SH1	SH2	n	Height	RM	DHS	n1	Height
7000			10	7000	7000	2045	3	
6875				6790	6875	2007		
6750			9	6780	6750	2193	3	
6625					6625	2152		
6500					6500	2110		
6375					6375	2068		
6250					6250	2027		
6125				6040	6125	1985		
6000			8	6030	6000	2192	3	
5875					5875	2145		
5750					5750	2098		
5625					5625	2051		
5500					5500	2004		
5375				5290	5375	1958		
5250			7	5280	5250	2190	3	
5125					5125	2136		
5000					5000	2083		
4875					4875	2029		
4750					4750	1976		
4625				4540	4625	1922		
4500			6	4530	4500	2188	3	
4375					4375	2125		
4250					4250	2063		
4125					4125	2000		
4000					4000	1938		
3875				3790	3875	1875		
3750			5	3780	3750	2184	3	
3625					3625	2109		
3500					3500	2034		
3375					3375	1959		
3250					3250	1884		
3125				3040	3125	1809		
3000			4	3030	3000	2179	3	
2875					2875	2085		
2750					2750	1991		
2625					2625	1898		
2500					2500	1804		2500
2375				2290	2375	2250	4	2490
2250			3	2280	2250	2125	3	
2125					2125	2000		
2000				2000	2000	1875		

Range 3: 7000 – 6125; Range 2: 6000 – 4000; Range 1: 3875 – 2000

	2	3	4	5
Number of infills / fields per aluminium frame				
(Number of infills / fields –1) × 2				
Number of ventilation grilles, ventilation area 40 cm² per grille				

SPB 52 LZ: 2250, 2500, 2750, 3000, 3250, 3500, 3750, 4000, 4250, 4500, 4750, 5000, 5250, 5500, 5750, 6000, 6250, 6500, 6750, 7000

On request

DHS Clear passage height of wicket door
DRH Lever height
LZ Clear frame dimensions **(from 2000)**
RM Grid height
SPB Rail width

SH_1 Threshold height **(rising from 5 to 10)**
SH_2 Threshold height **(approx. 13)**
n Number of aluminium frames
n_1 Number of aluminium frames in the wicket door
TH Door section height

Sectional Door ALR F42 S-Line

Door leaf made of aluminium extrusions

External view

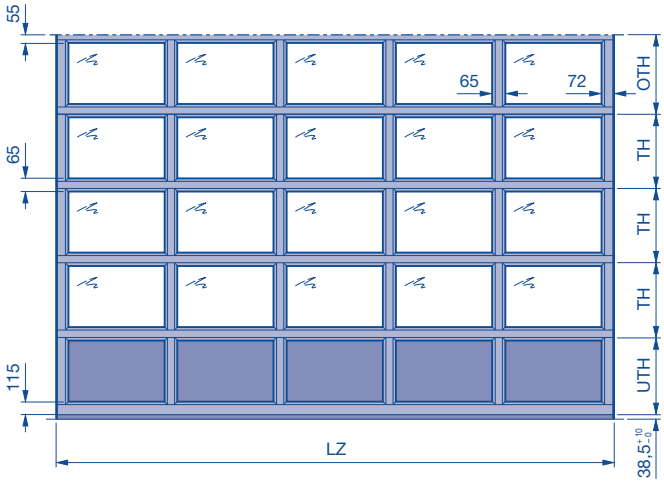

$$TH = \frac{\text{Door height} - 143.5}{\text{Number of door section frames}}$$

OTH = TH + 68
UTH = TH + 97

Note:
When using a shaft operator (installation example 5), the door lock is always on the side opposite the operator

Size range

In the size range shown, any door width can be produced in 10-mm increments. Observe min. ceiling height.

RM		n	Height
Range 3	7000, 6875, 6750, 6625, 6500, 6375, 6250, 6125	11	6770
		10	6760 / 6110
	6000, 5875, 5750, 5625, 5500, 5375, 5250, 5125	9	6100 / 5440
		8	5430 / 4780
Range 2	5000, 4875, 4750, 4625, 4500, 4375, 4250, 4125	7	4770 / 4120
	4000, 3875, 3750, 3625	6	4110 / 3460
Range 1	3500, 3375, 3250, 3125, 3000, 2875	5	3450 / 2800
	2750, 2625, 2500, 2375, 2250	4	2790 / 2130
	2125, 2000, 1875	3	2125 / 1875

[1]	2	3	4	5	Number of infills / fields per aluminium frame
Number of infills / fields × 2					Number of ventilation grilles, ventilation area 40 cm² per grille

1500 2000 2250 2500 2750 3000 3250 3500 3750 4000 4250 4500 4750 5000

SPB 65

LZ

On request

[1] 1 → 1300
RM Grid height
LZ Clear frame dimensions **(from 1200)**

→ Up to LZ
SPB Rail width
n Number of aluminium frames
UTH Bottom door section height

TH Door section height
OTH Upper door section height

Sectional Door ALR F42 Glazing

Door leaf made of standard aluminium extrusions

External view

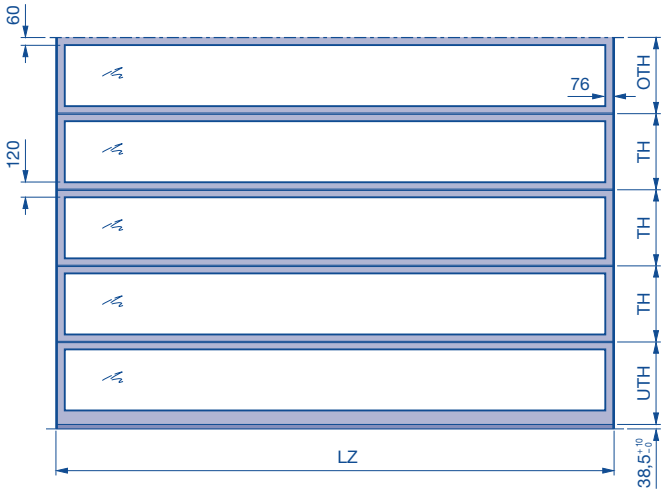

$$TH = \frac{\text{Door height} - 119}{\text{Number of door section frames}}$$

$UTH = TH + 84 \leq 785$
$OTH = TH + 35$

Note:
When using a shaft operator (installation example 5), the door lock is always on the side opposite the operator

Size range

In the size range shown, any door width can be produced in 10-mm increments. Observe min. ceiling height.

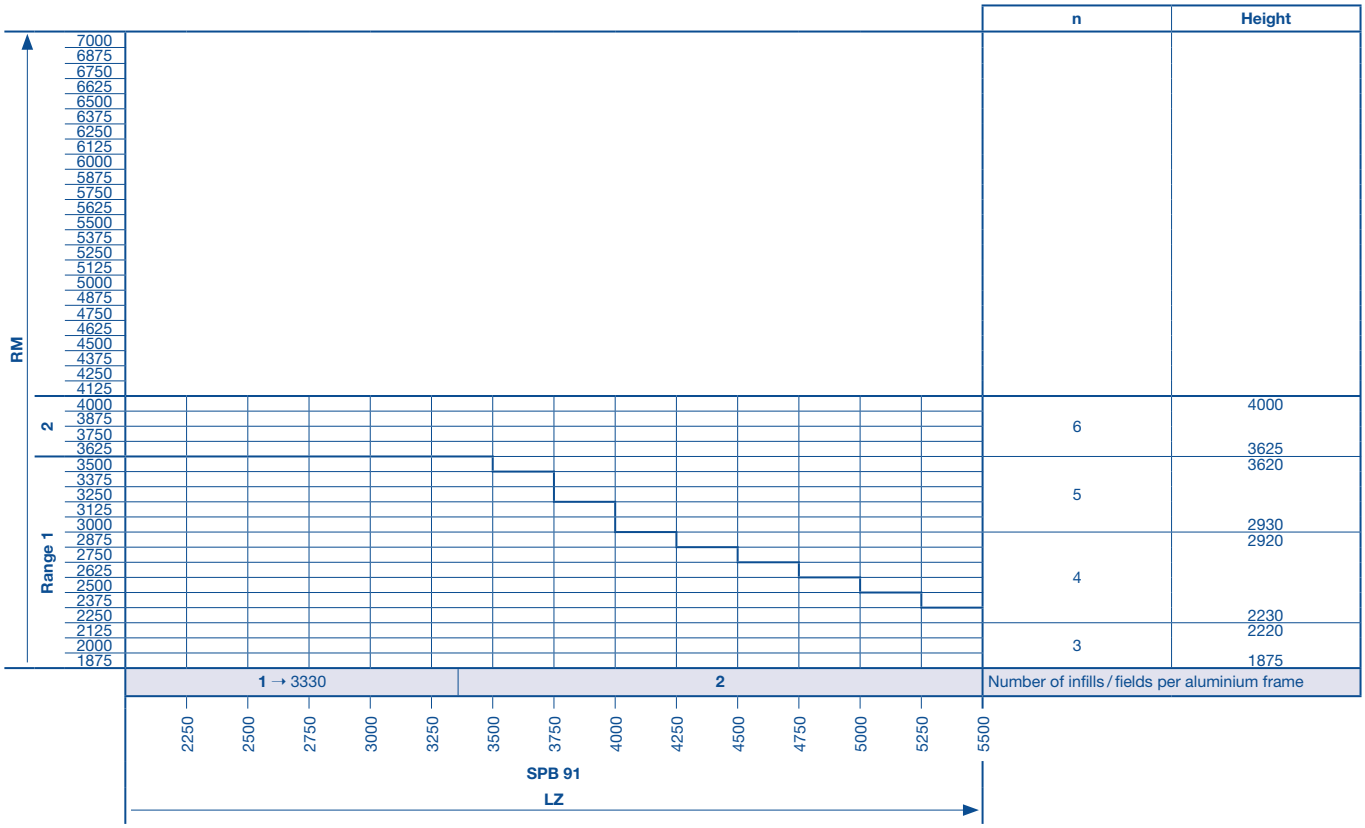

RM	Grid height	**n**	Number of aluminium frames
LZ	Clear frame dimensions **(from 2000)**	**UTH**	Bottom door section height
→	Up to LZ	**TH**	Door section height
SPB	Rail width	**OTH**	Upper door section height

Sectional Door ALR F42 Vitraplan

Door leaf made of standard aluminium extrusions

External view

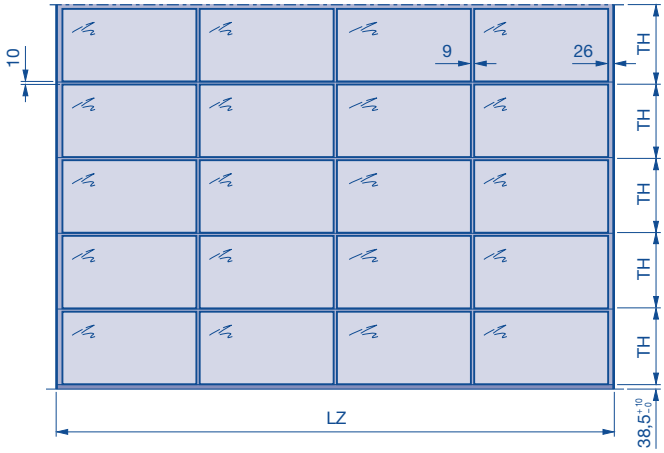

$$TH = \frac{\text{Door height} - 35}{\text{Number of door section frames}}$$

Note:

- When using a shaft operator (installation example 5), the door lock is always on the side opposite the operator
- For door widths from 5500 mm, diagonal struts are fitted into the bottom door section.

Size range

In the size range shown, any door width can be produced in 10-mm increments. Observe min. ceiling height.

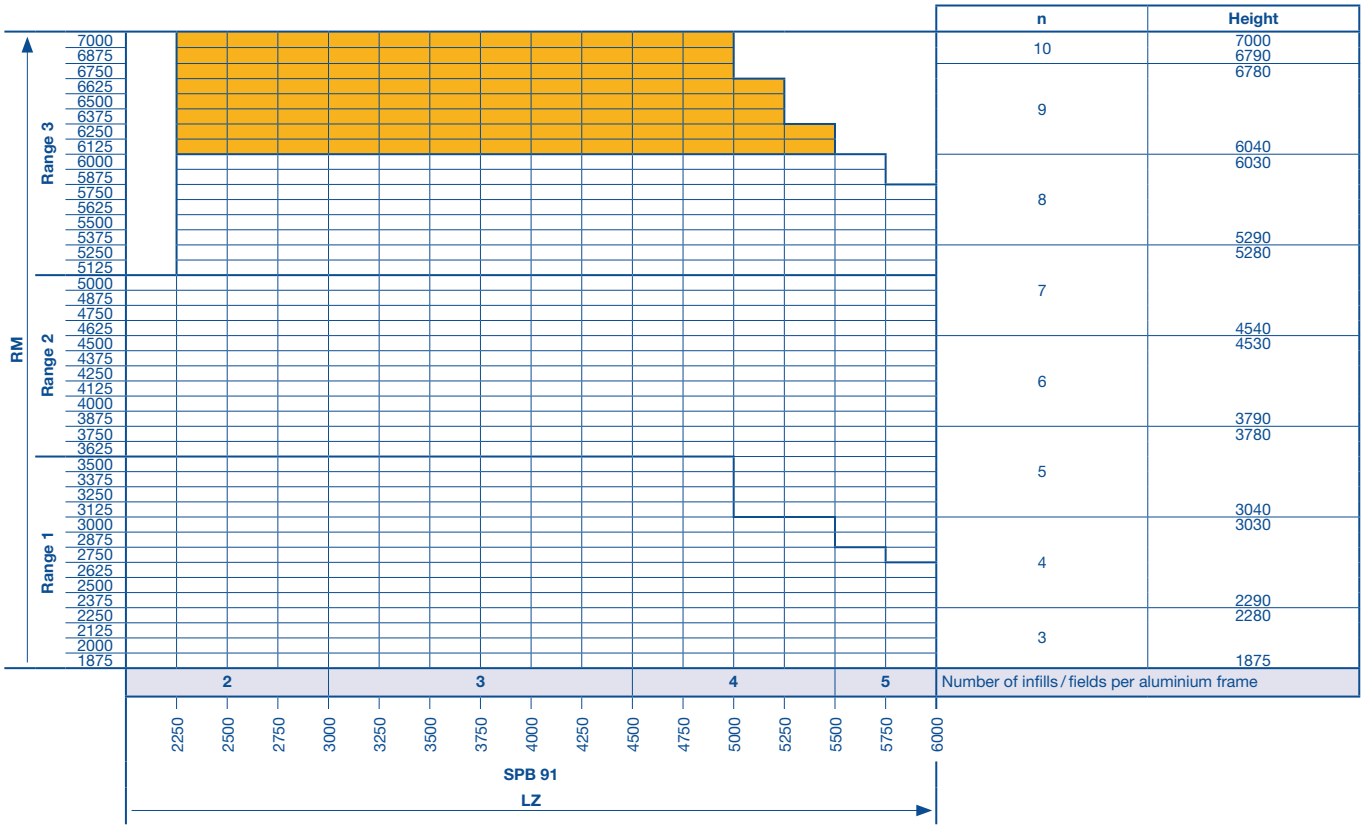

n	Height
10	7000 6790
9	6780 6040
8	6030 5290
7	5280 4540
6	4530 3790
5	3780 3040
4	3030 2290
3	2280 1875

On request

RM Grid height
LZ Clear frame dimensions **(from 2000)**
SPB Rail width
n Number of aluminium frames

TH Door section height

Glazing / Wicket Door Arrangements

Sectional doors with 3 infills / fields

Glazing arrangements – external view

Sectional door SPU F42
with wicket door with trip-free threshold

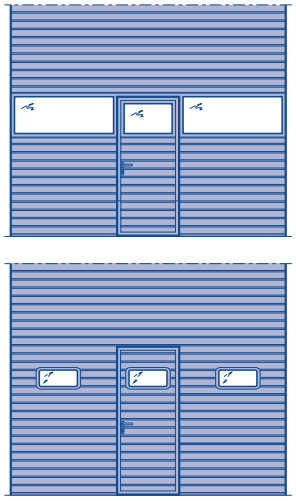

Sectional door SPU F42,
matching doors with wicket door

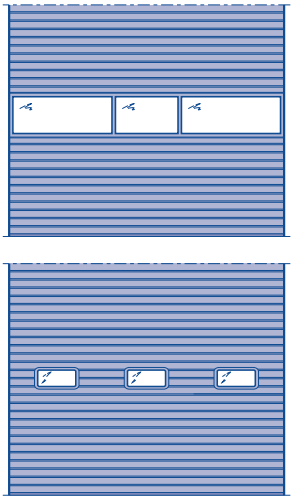

Sectional door SPU F42
with standard window division

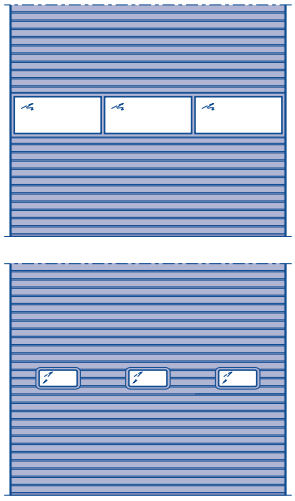

Sectional door APU F42
with wicket door with trip-free threshold

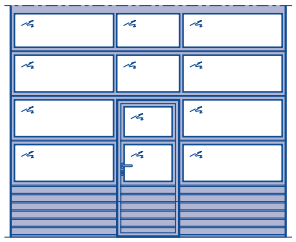

Sectional door APU F42,
matching doors with wicket door

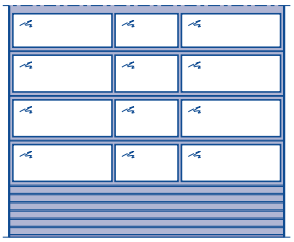

Sectional door APU F42
with standard window division

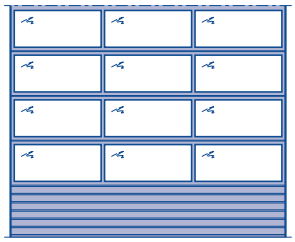

Sectional door ALR F42
with wicket door with trip-free threshold

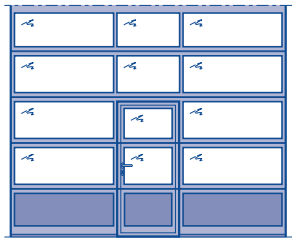

Sectional door ALR F42,
matching doors with wicket door

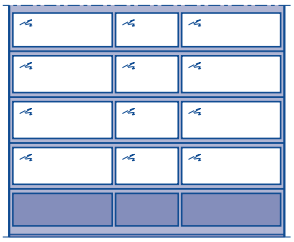

Sectional door ALR F42
with standard window division

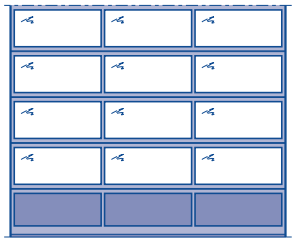

Arrangement of the wicket door

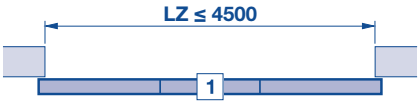

Notes:
- Clear passage width (LDBS) = 940 mm.
- Wicket door only opening outwards.

Glazing / Wicket Door Arrangements

Sectional doors with 4 infills / fields

Glazing arrangements – external view

Sectional door SPU F42
with wicket door with trip-free threshold

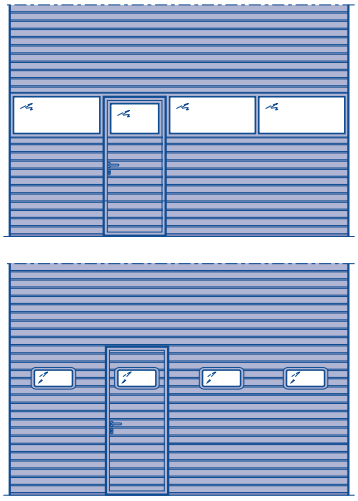

Sectional door SPU 42,
matching doors with wicket door

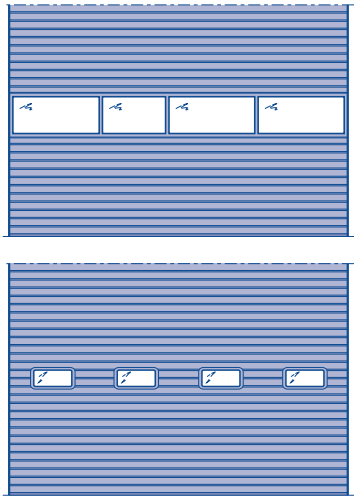

Sectional door SPU F42
with standard window division

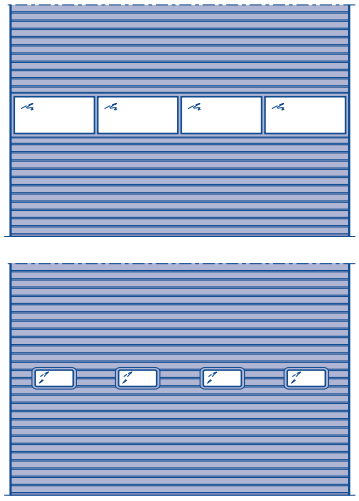

Sectional door APU F42
with wicket door with trip-free threshold

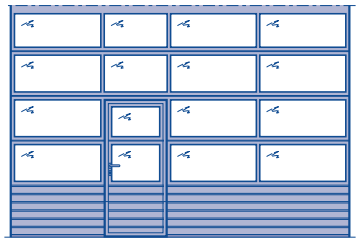

Sectional door APU F42,
matching doors with wicket door

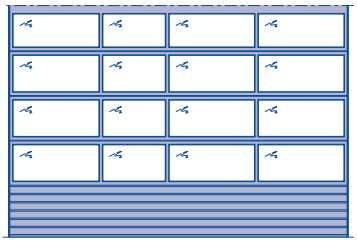

Sectional door APU F42
with standard window division

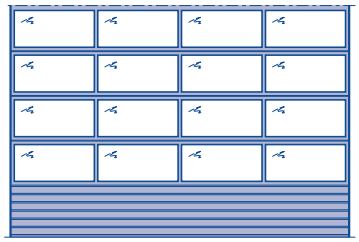

Sectional door ALR F42
with wicket door with trip-free threshold

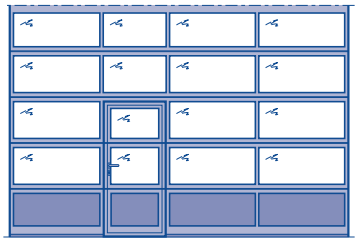

Sectional door ALR F42,
matching doors with wicket door

Sectional door ALR F42
with standard window division

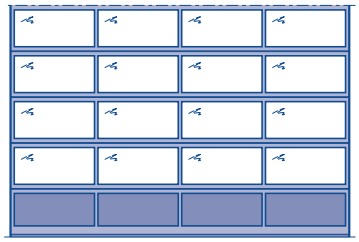

Arrangement of the wicket door

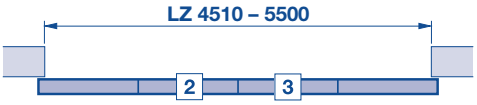

Notes:
- Clear passage width (LDBS) = 940 mm.
- Wicket door only opening outwards.

Glazing / Wicket Door Arrangements

Sectional doors with 5 infills / fields

Glazing arrangements – external view

Sectional door SPU F42
with wicket door with trip-free threshold

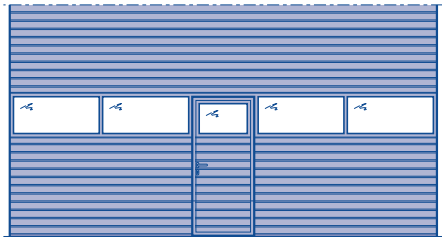

Sectional door SPU 42,
matching doors with wicket door

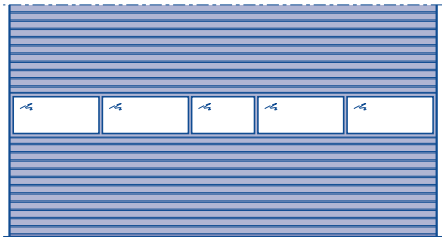

Sectional door SPU F42
with standard window division

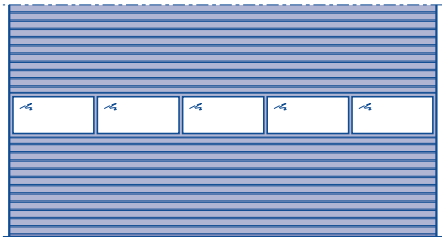

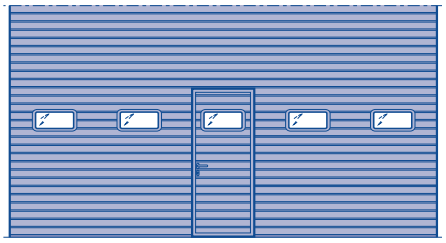

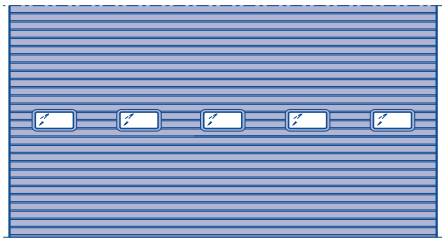

Sectional door APU F42
with wicket door with trip-free threshold

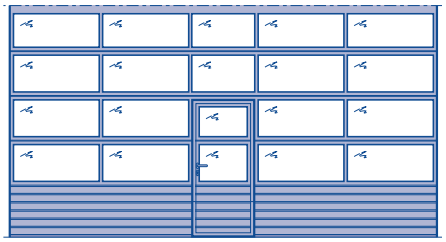

Sectional door APU F42,
matching doors with wicket door

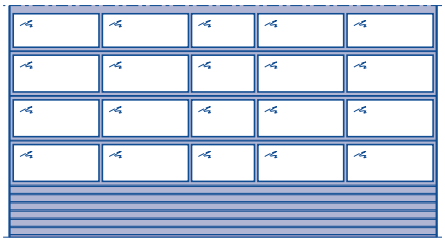

Sectional door APU F42
with standard window division

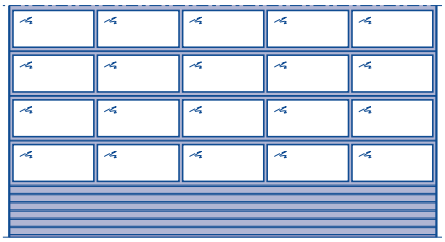

Sectional door ALR F42
with wicket door with trip-free threshold

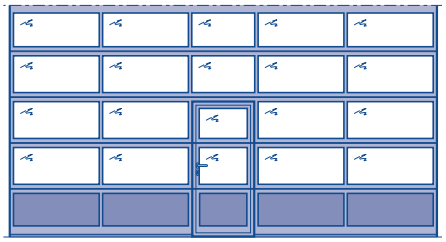

Sectional door ALR F42,
matching doors with wicket door

Sectional door ALR F42
with standard window division

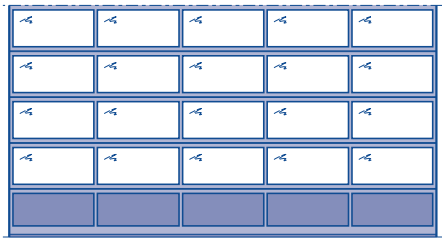

Arrangement of the wicket door

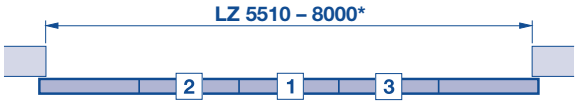

Notes:

- Clear passage width (LDBS) = 940 mm.
- Wicket door only opening outwards.

* Thermo version only up to LZ 7000 mm.

Infills / Fields and Glazing Series 40

Number of infills / fields per aluminium frame

	Sectional door without wicket door							
Aluminium frame type N	1	2	3	4	5	6	7	8
Aluminium frame type B	1	2 → 3330	3	4 → 6670	5			
	Sectional door with wicket door							
Aluminium frame type N		3 → 1750 – 3500	4	5	6	7		

1200 1500 2000 2250 2500 2750 3000 3250 3500 3750 4000 4250 4500 4750 5000 5250 5500 5750 6000 6250 6500 6750 7000 7250 7500 7750 8000

LZ

Number of compound glazings per door section

	Sectional door without wicket door							
Standard type A	1 → 1680	2	3	4	5	6	7	8
Standard type D	1 → 1640	2	3	4	5	6	7	8
Standard type E	1 → 1860	2 → 2750	3 → 3650	4 → 4540	5 → 5510	6		
	Sectional door with wicket door							
Type A or type D		1 → 1750 – 2650	3	4	5	6	7	
Type E		1 → 1840 – 2920	3 → 3880	4 → 4830	5 → 5780	6		

1200 1500 2000 2250 2500 2750 3000 3250 3500 3750 4000 4250 4500 4750 5000 5250 5500 5750 6000 6250 6500 6750 7000 7250 7500 7750 8000

LZ

LZ Clear frame dimensions
→ Up to LZ

Side Door NT 60

With S-ribbed, Stucco-textured / L-ribbed, Micrograin infills

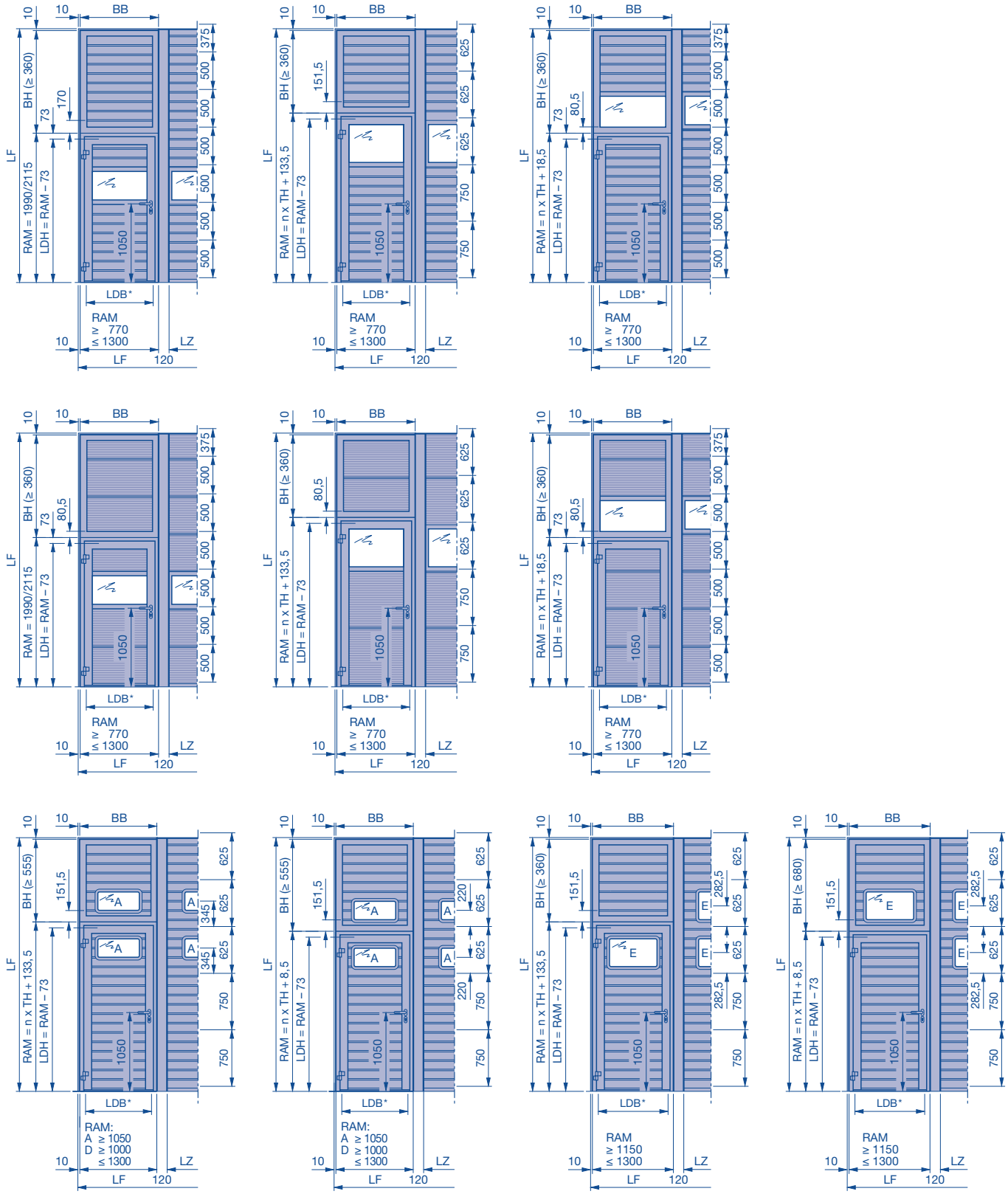

*	See page 40	**BB**	Panel width	**SO**	Bottom section height
LF	Structural opening	**LDB**	Clear passage width	**LZ**	Clear frame dimensions
RAM	Overall frame dimension	**LDH**	Clear passage height	**n**	Number of door sections / aluminium frames
BH	Panel height	**TH**	Door section height		

Side Door NT 60

With L-ribbed, Micrograin infills

Compound glazing type A TH =500

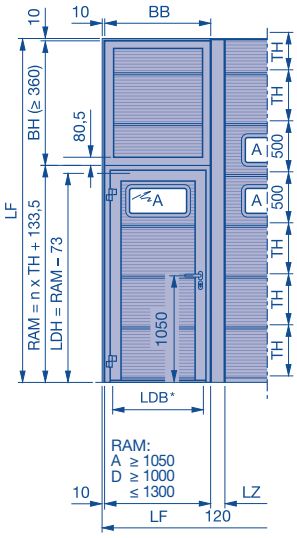

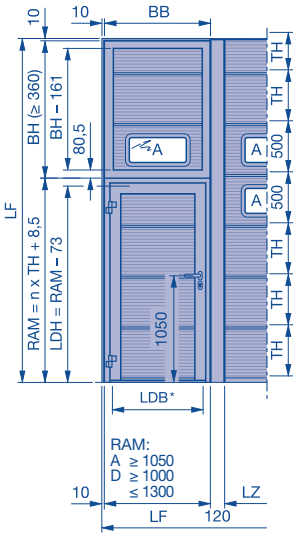

Compound glazing type A TH = 625 and 750

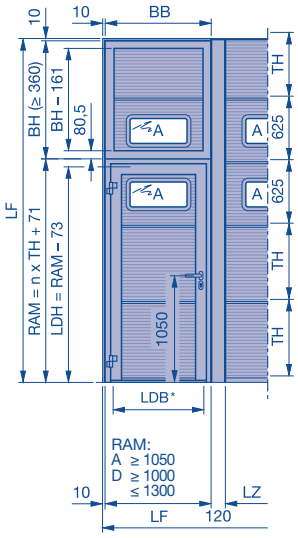

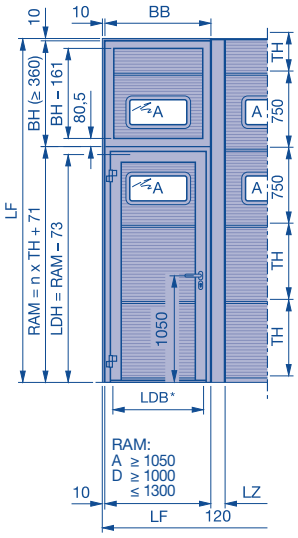

Compound glazing type A TH = 625 / 750 and 750 / 625

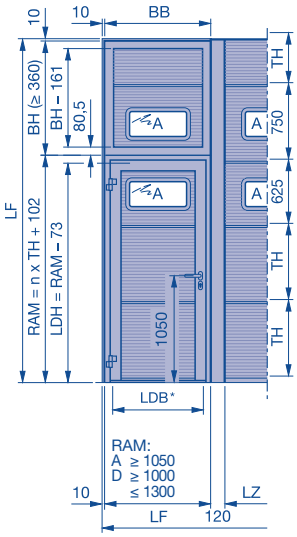

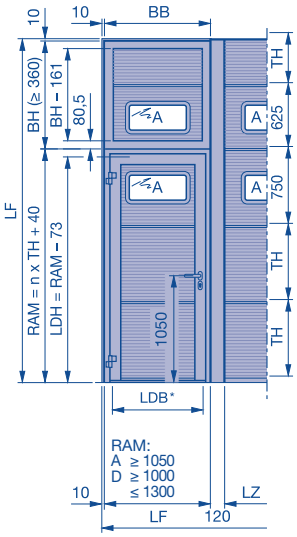

Compound glazing type E TH = 625

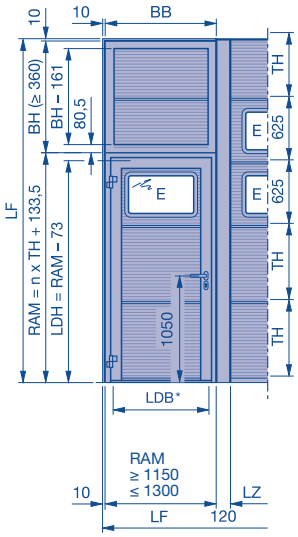

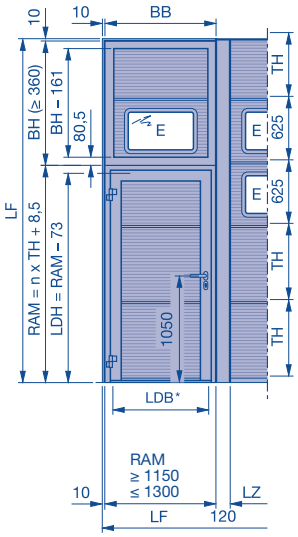

Compound glazing type E TH = 750

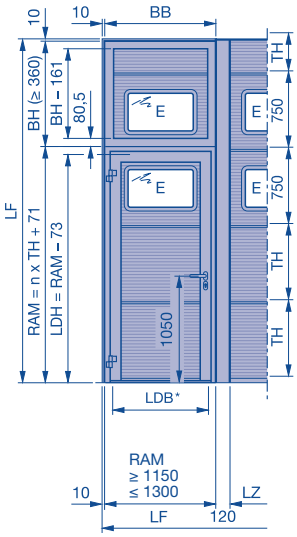

(Legend see page 37)

Side Door NT 60

With S-ribbed, Stucco-textured / L-ribbed, Micrograin infills

Side door NT 60 matching door type APU F42

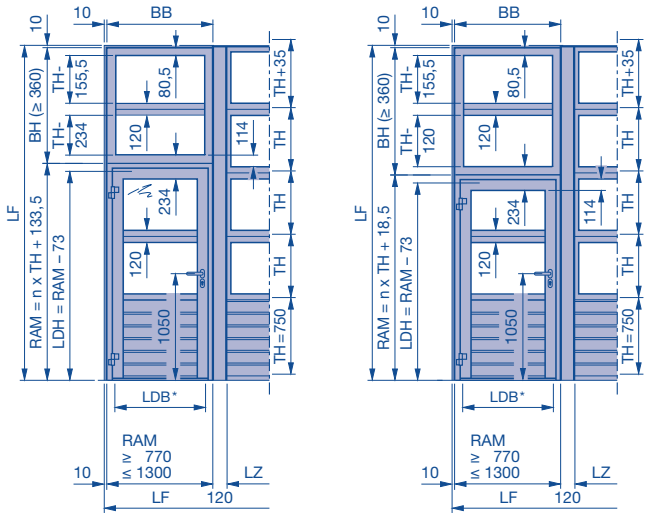

Side door NT 60 matching door type ALR F42 Thermo

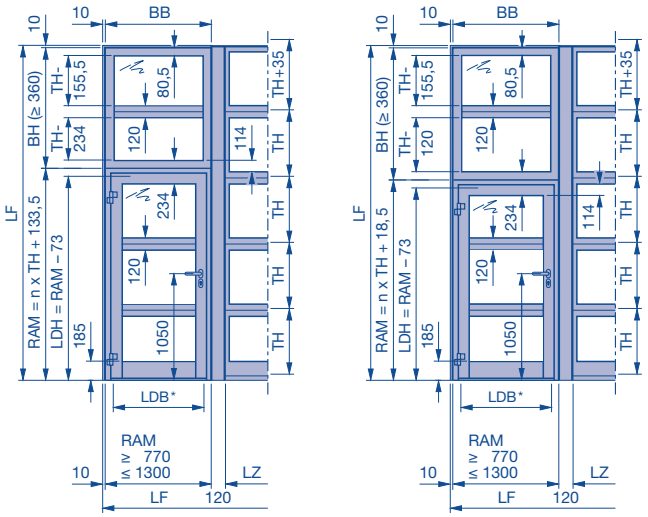

Side door NT 60 matching door type APU F42 S-Line

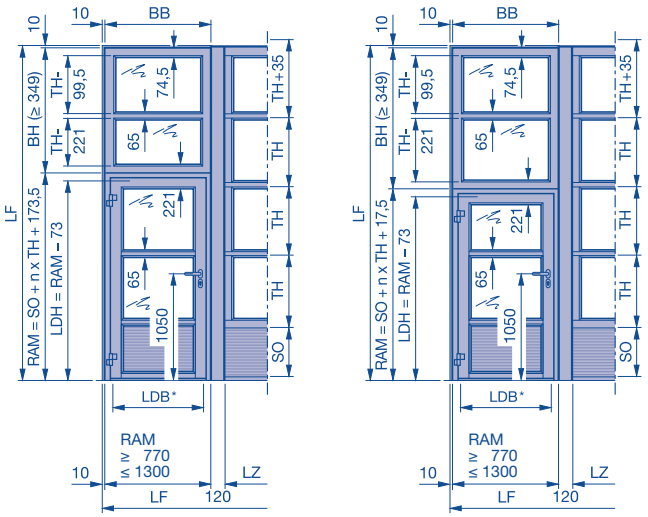

Side door NT 60 matching door type ALR F42 S-Line

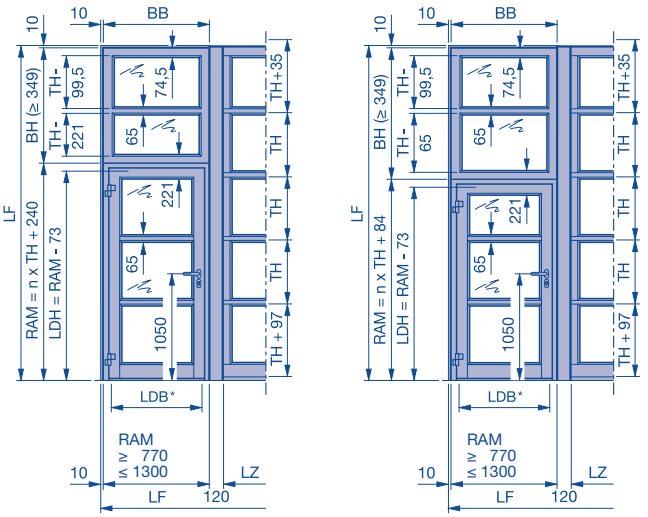

Side door NT Vitraplan

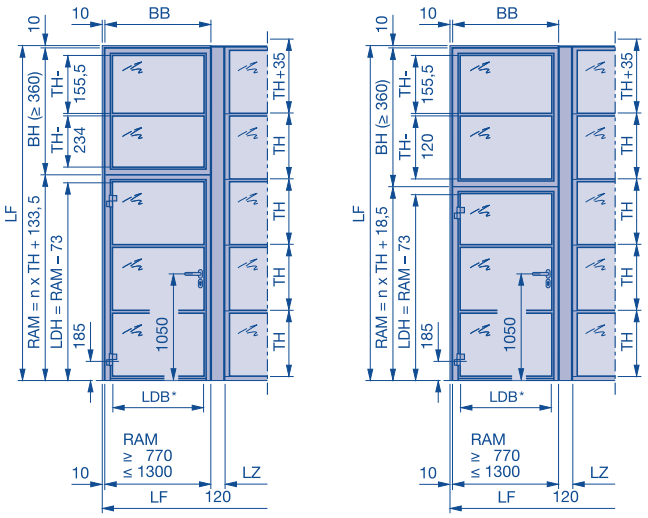

(Legend see page 37)

Side Door NT 60

Arrangements
Possible track models

Arrangements

Arrangement 1
Fitting next to the door, opening outwards, RH hinged

Arrangement 2
Fitting next to the door, opening outwards, LH hinged

Arrangement 3
Fitting next to the door, opening inwards, LH hinged

Arrangement 4
Fitting next to the door, opening inwards, RH hinged

Arrangement 5
Fitting in the opening, opening outwards, RH or LH hinged

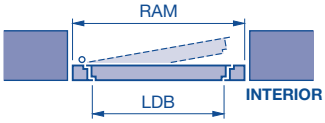

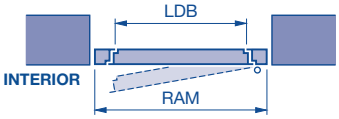

Arrangement 6
Fitting in the opening, opening inwards, RH or LH hinged

Arrangement 7
Fitting behind the opening, only opening inwards, RH or LH hinged

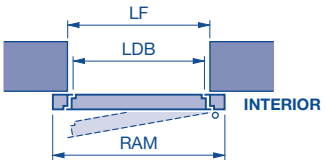

Structural opening	Ordering size Overall frame dimensions RAM
875 × 2000	855 × 1990
875 × 2125	855 × 2115
1000 × 2000	980 × 1990
1000 × 2125	980 × 2115
Special sizes: width: RAM 770 to 1300, height: RAM 1865 to 2525 **(state overall frame dimension)** **Doors with 3-point locking:** RAM = min. 2025 mm	

Clear passage dimensions:

Opening angle	Width	Height
136°	RAM – 146	RAM – 73
90°	RAM – 200	

Side Door NT 60

Arrangements
Possible track models

Possible handing options

SPU F42
No window section,
no compound glazing

SPU F42, APU F42
with fascia panel

ALR F42,
ALR F42 Thermo
with fascia panel

APU F42 S-Line

ALR F42 S-Line

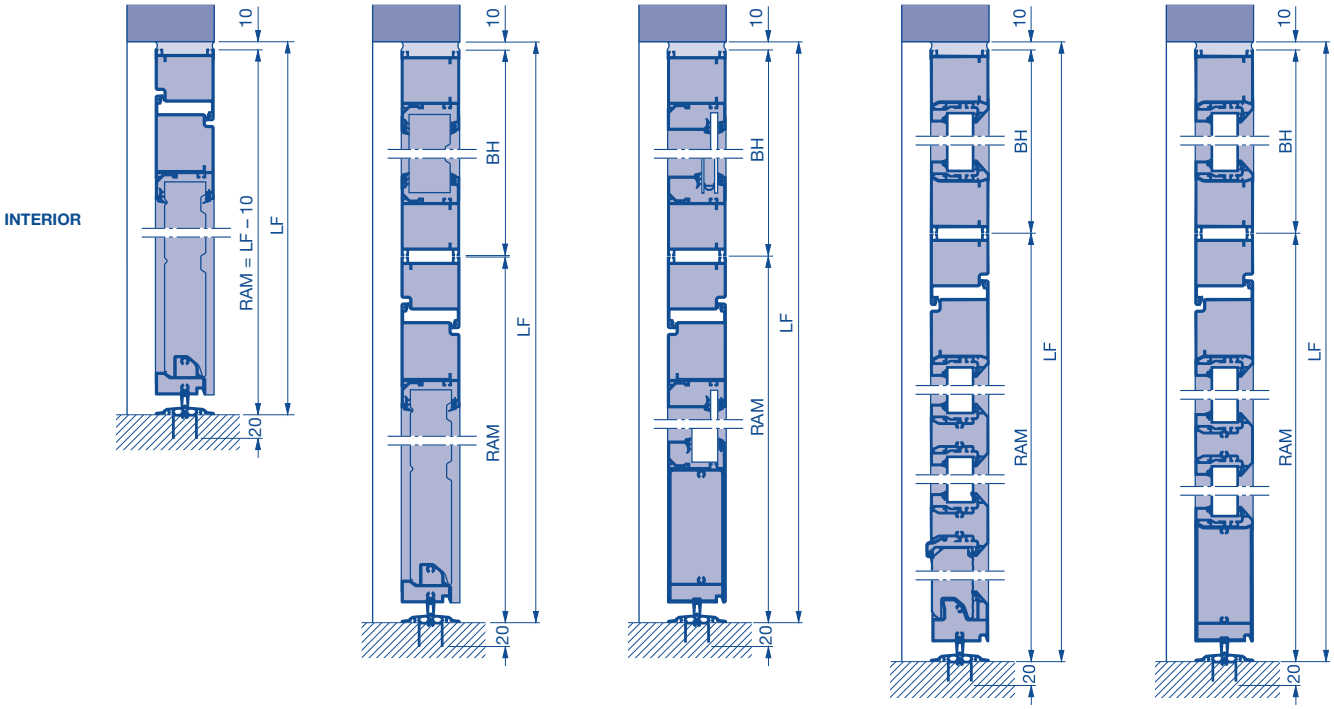

In the opening
(right illustration with 50 mm extension profile for all-over insulation)

Behind the opening

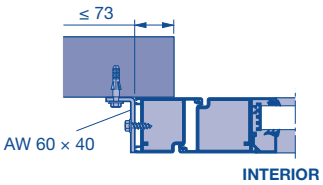

Side door NT 60 flush with sectional door

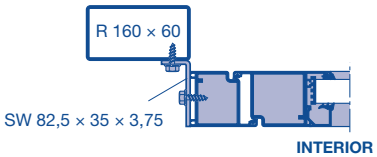

Plugs for metal frame

Tapping screw
with countersunk head B 6.3 × 80

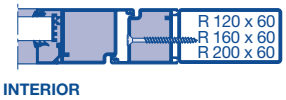

R	Tube	**BH**	Panel height	**LF**	Structural opening
AW	Aluminium angle	**RAM**	Overall frame dimension		
SW	Steel angle	**LDB**	Clear passage width		

Track Application: N

Normal track application

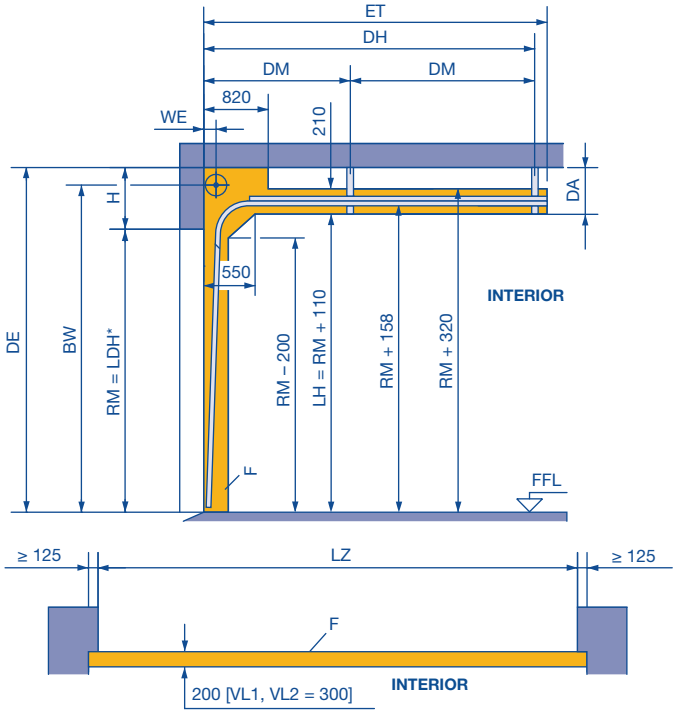

Door weights for roof loads:

SPU F42 / APU F42 Thermo / ALR F42 Thermo = 320 N/m²
APU F42 / ALR F42 = 280 N/m²
ALR F42 Glazing = 560 N/m²

Observe min. sideroom, see page 61.

	H	WE	DA
N 1	390	140	280
N 2	440	160	330
N 3	550	180	440
N 3	760	With double spring shaft	

LDH Clear passage height
RM Grid height
BW Position of shaft support
N 1 = RM + 310
N 2 = RM + 335
N 3 = RM + 415
ET Min. distance back
N 1 + N 2 = RM + 440
N 3 = RM + 700
With shaft operator
N 1 + N 2 = RM + 650
With shaft operator N 3 = RM + 700
DH Rear ceiling anchor
N 1 + N 2 = RM + 195
N 3 = RM + 295
DM Central ceiling anchor (see page 66)
WE Shaft centre from lintel
H Min. headroom (see table)
DA Distance to ceiling
L Anchor length = DE – RM – 125 (see page 66)
LH Track height
LZ Clear frame dimensions
DE Ceiling height
F Space for fitting the door

Notes:

- Observe the permissible size ranges of the door types on pages 10 – 18 and 21 – 32 under all circumstances!
- The clearance required for fitting the door must be free of supply lines, heater fans, etc.
- For version with wicket door, manually operated: chain hoist recommended!
- ALR F42 Vitraplan and ALR F42 Glazing on request

	* Clear passage height LDH		
	Without operator	Operator	
		WA 400 **	WA 300 ***
LZ ≤ 5500			
Without wicket door	RM	RM	RM
Wicket door with threshold	RM – 100	RM – 50	RM – 50
Wicket door without threshold rail	RM – 150	RM – 85	RM – 85
LZ > 5500			
Without wicket door	RM – 50	RM – 50	RM – 50
Wicket door with threshold	RM – 100	RM – 100	RM – 100
Wicket door without threshold rail	RM – 175	RM – 110	RM – 110

** Or with chain hoist / pull rope
*** Track application with inclination not possible!

Min. headroom

Track size	Headroom	Track size	Headroom	Track size	Headroom
N 1	390	GD 2	660 – 790	RD 4	1760
N 2	440	L 1	200	RD 5	1760
N 3	550	L 2	200	RG 4	1760
NA 1	400	LD 1	200	RG 5	1760
NA 2	450	LD 2	200	V 6	RM + 500
ND 1	390	H 4	880	V 7	RM + 540
ND 2	440	H 5	910	V 9	RM + 635
ND 3	550	H 8	950	VA 6	RM + 510
NH 1	610 – 740	HA 4	890	VU 6	RM + 350
NH 2	660 – 790	HD 4	880	VU 7	RM + 350
NH 3	770 – 900	HD 5	910	VU 9	RM + 350
NS 1	390	HD 8	950	WG 6	RM + 350
NS 2	440	HU 4	1760	WG 7	RM + 350
GD 1	610 – 740	HU 5	1760		

Dimensions in mm

Track Application: NA

Normal track application
With high-mounted torsion spring shaft

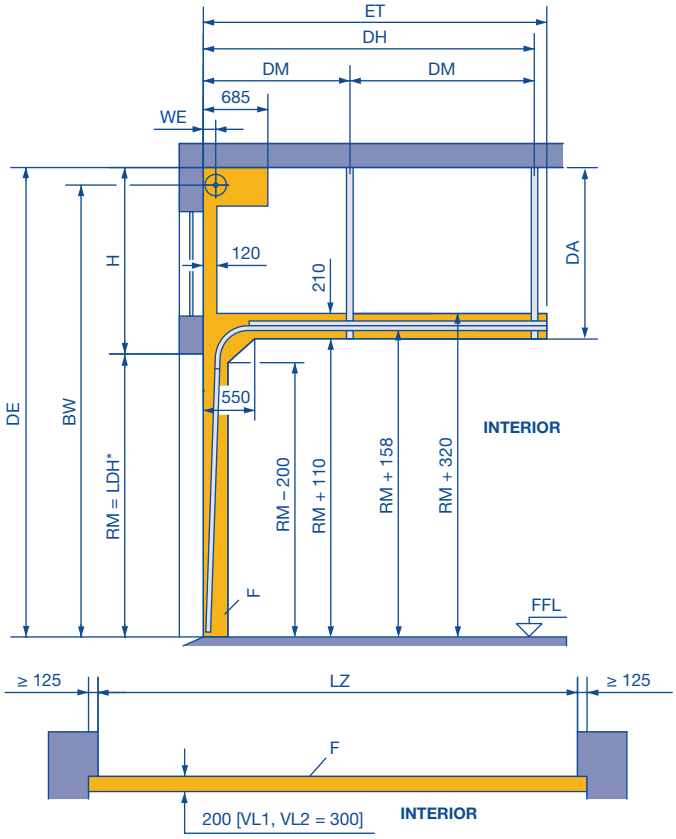

Door weights for roof loads:

SPU F42 / APU F42 Thermo / ALR F42 Thermo = 320 N/m²
APU F42 / ALR F42 = 280 N/m²
ALR F42 Glazing = 560 N/m²

Observe min. sideroom, see page 61.

	H min.	WE	DA min.
NA 1	400	140	290
NA 2	450	160	340

LDH Clear passage height
H Max. headroom (depends on order)
DA Max. distance to ceiling (depends on order)
RM Grid height
DE Ceiling height (depends on order)
BW Position of shaft support
NA 1: $BW_{min.}$ = RM + 320
NA 2: $BW_{min.}$ = RM + 345
NA 1: $BW_{max.}$ (7820) = DE – 80
NA 2: $BW_{max.}$ (7995) = DE – 105
ET Min. distance back
NA 1 + NA 2 = RM + 440
With shaft operator
NA 1 + NA 2 = RM + 650
DH Rear ceiling anchor
NA 1 + NA 2 = RM + 195
DM Central ceiling anchor (see page 66)
WE Shaft centre from lintel
L Anchor length = DE – RM – 125 (see page 66)
LZ Clear frame dimensions
F Space for fitting the door

*** Note:**
Clear passage height LDH, see track application N

Notes:
- Observe the permissible size ranges of the door types on pages 10 – 18 and 21 – 32 under all circumstances!
- The clearance required for fitting the door must be free of supply lines, heater fans, etc.
- ALR F42 Vitraplan and ALR F42 Glazing on request

Track Application: ND

Normal track application
With inclination up to max. 30°

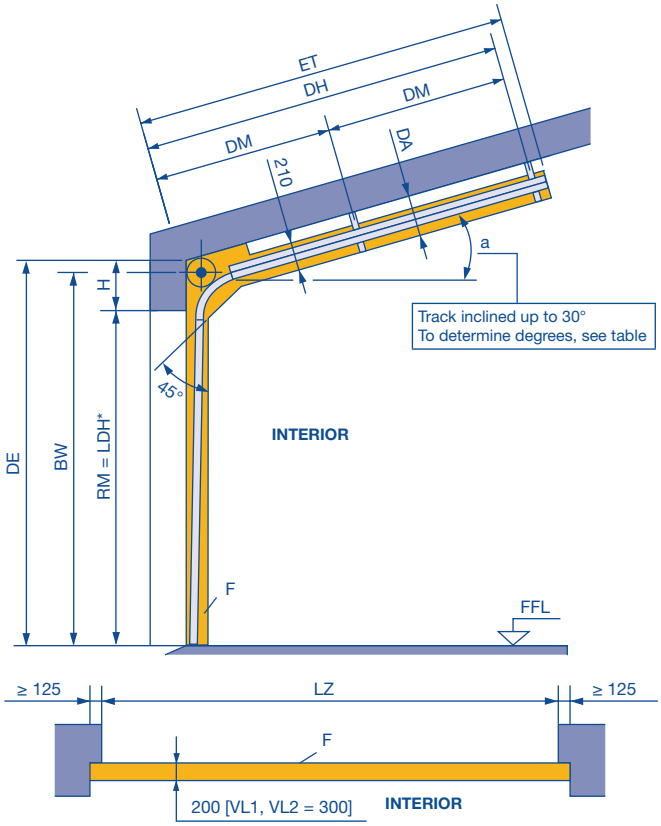

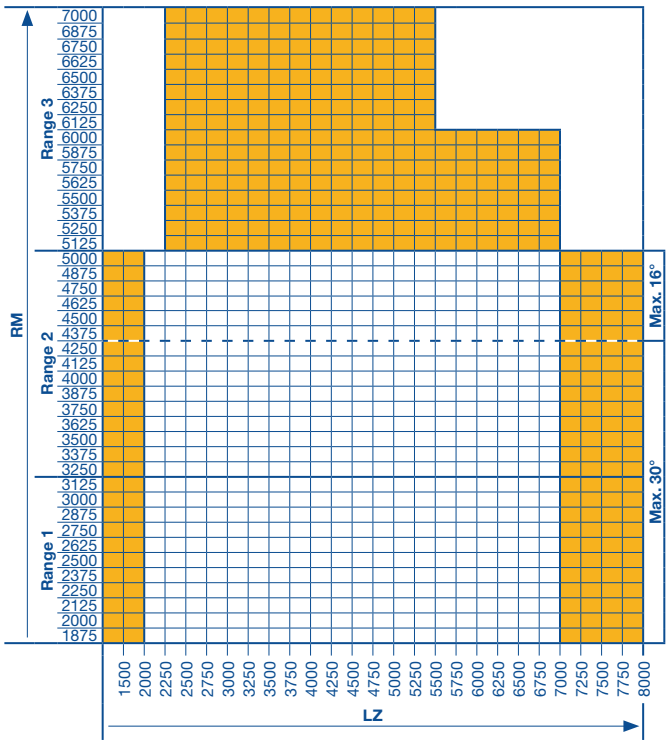

*** Note:**
Clear passage height LDH, see track application N

Note:
The clearance required for fitting the door must be free of supply lines, heater fans, etc.

Door weights for roof loads:

SPU F42 / APU F42 Thermo / ALR F42 Thermo	= 320 N/m²
APU F42 / ALR F42	= 280 N/m²
ALR F42 Glazing	= 560 N/m²

Observe min. sideroom, see page 61.

	H	DA
ND 1	390	430
ND 2	440	450
ND 3	550	580
ND 3	760	With double spring shaft

ET = min. distance back		
ND 1 + 2 + 3	RM + 450 – a° × 6.5	a° > 5° and with / without operator, with short spring buffer
	RM + 700 – a° × 6.5	a° ≤ 5° and with operator, with long spring buffer
	RM + 450 – a° × 6.5	a° ≤ 5° and manual operation with short spring buffer

See the normal track application for all other fitting dimensions.

Only to determine the roof slope in degrees (a°)

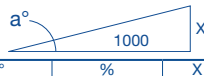

a°	%	X (mm)	a°	%	X (mm)
1	1.75	17.5	16	28.67	286.7
2	3.49	34.9	17	30.57	305.7
3	5.24	52.4	18	32.49	324.9
4	6.99	69.9	19	34.43	344.3
5	8.75	87.5	20	36.40	364.0
6	10.51	105.1	21	38.39	383.9
7	12.28	122.8	22	40.40	404.0
8	14.05	140.5	23	42.45	424.5
9	15.84	158.4	24	44.52	445.2
10	17.63	176.3	25	46.63	466.3
11	19.44	194.4	26	48.77	487.7
12	21.26	212.6	27	50.95	509.5
13	23.09	230.9	28	53.17	531.7
14	24.93	249.3	29	55.43	554.3
15	26.79	267.9	30	57.74	577.4

Note:
- Observe the permissible size ranges of the door types on pages 10 – 18 and 21 – 32 under all circumstances!
- ALR F42 Vitraplan and ALR F42 Glazing on request

LDH Clear passage height
DH Rear ceiling anchor
ND 1 + ND 2 = RM + 195 – a° × 6.5
ND 3 = RM + 295 – a° × 6.5
DM Central ceiling anchor (see page 66)
H Min. headroom (see page 42)
DA Distance to ceiling
L Anchor length = DE – RM + 25 (see page 66)
LZ Clear frame dimensions **(from 1200)**
DE Ceiling height
ET Min. distance back
RM Grid height
F Space for fitting the door

On request

Dimensions in mm

Track Application: NH

Normal track application
With minimum high-lift

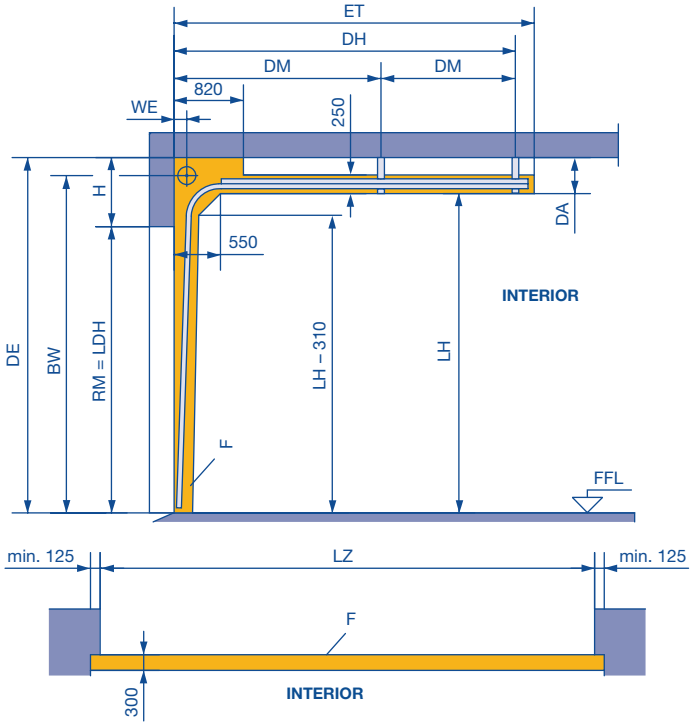

Door weights for roof loads:

SPU F42 / APU F42 Thermo / ALR F42 Thermo = 320 N/m²
APU F42 / ALR F42 = 280 N/m²
ALR F42 Glazing = 560 N/m²

Observe min. sideroom, see page 61.

	WE	DA
NH 1	140	280
NH 2	160	330
NH 3	180	440

	ET = min. distance back	
NH 1 + 2	2 × RM – LH + 1120	For manual operation with long spring buffer (standard)
	2 × RM – LH + 650	For manual operation with short spring buffer (special)
	2 × RM – LH + 880	For shaft operator with long spring buffer = (LH – RM) ≤ 1000
	2 × RM – LH + 650	For shaft operator with short spring buffer = (LH – RM) > 1000
NH 3	2 × RM – LH + 950	For manual operation and shaft operator with long spring buffer (standard)

Notes:

- The clearance required for fitting the door must be free of supply lines, heater fans, etc.
- Observe the permissible size ranges of the door types on pages 10 – 18 and 21 – 32 under all circumstances!
- ALR F42 Vitraplan and ALR F42 Glazing on request

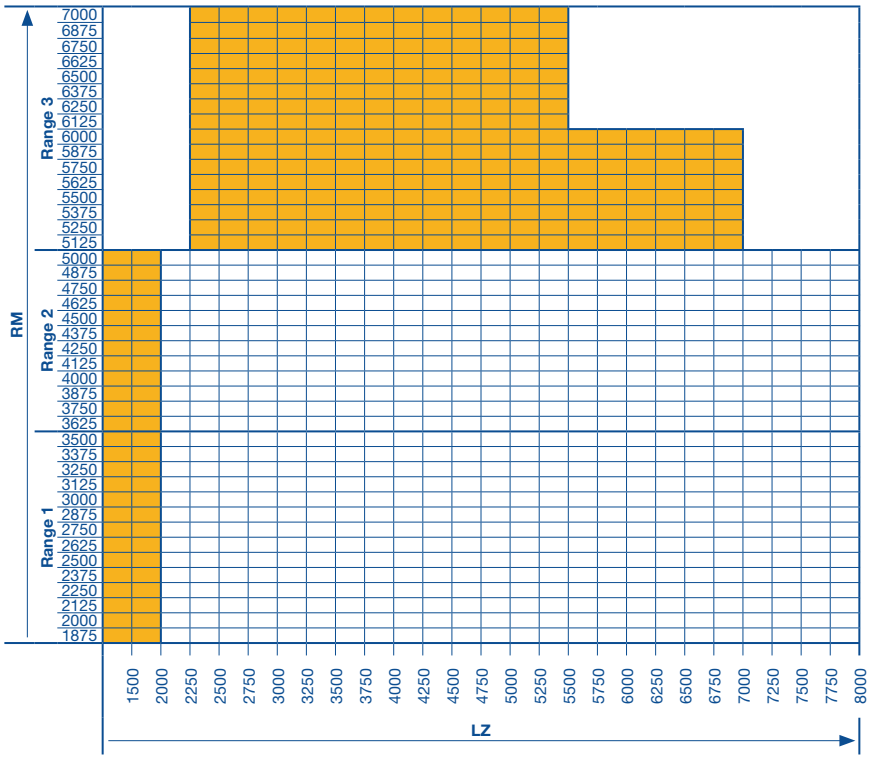

LDH	Clear passage height
RM	Grid height
BW	Position of shaft support NH 1 = LH + 200 NH 2 = LH + 225 NH 3 = LH + 305
LH	Track height Min. = RM + 330 max. = RM + 460
DH	Rear ceiling anchor NH 1 + NH 2 = 2 × RM – LH + 645 (long spring buffer) NH 1 + NH 2 = 2 × RM – LH + 405 (short spring buffer) NH 1 + NH 2 = 2 × RM – LH + 405 (long spring buffer + operator) NH 3 = 2 × RM – LH + 485
DM	Central ceiling anchor (see page 66)
WE	Shaft centre from lintel
H	Min. headroom (see page 42)
DA	Distance to ceiling
DE	Ceiling height
L	Anchor length = DE – LH + 15 (see page 66)
LZ	Clear frame dimensions **(from 1200)**
ET	Min. distance back
F	Space for fitting the door

On request

Dimensions in mm

Track Application: NS

Normal track application
With double radius 2 × 45°

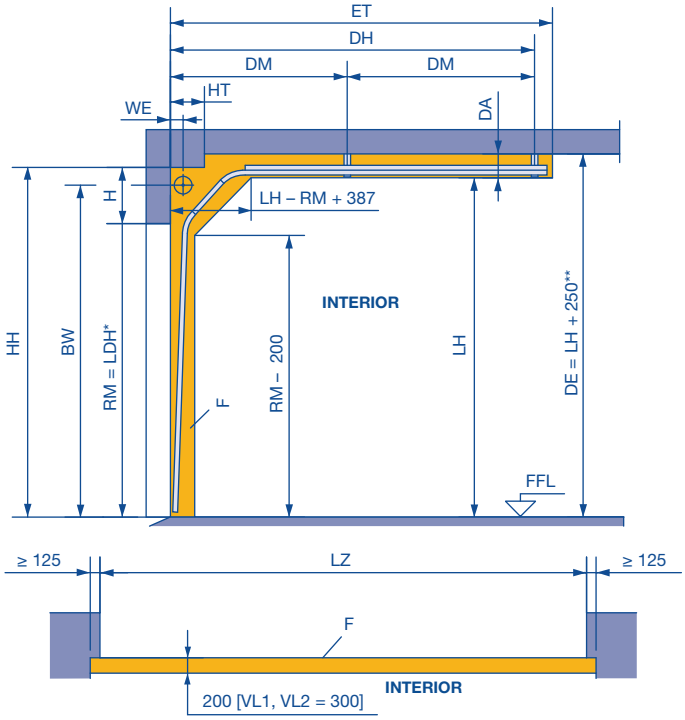

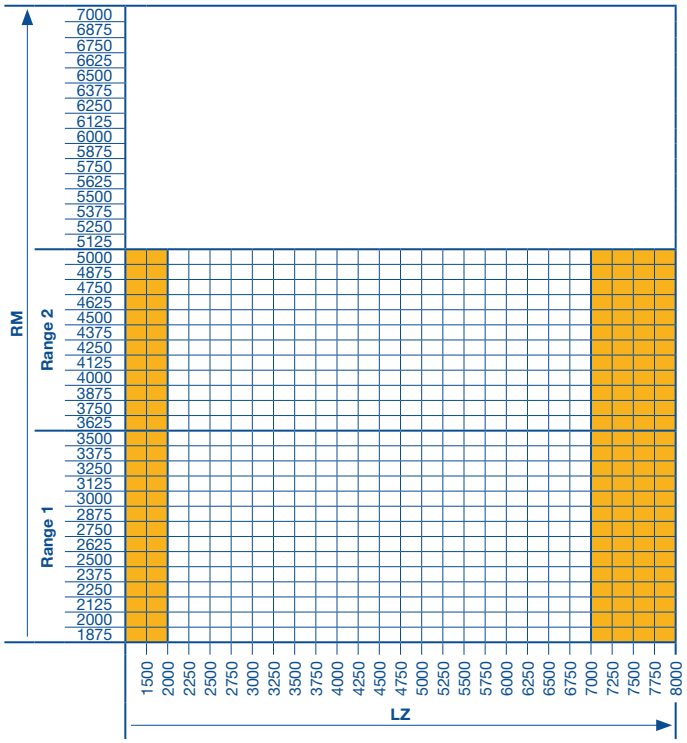

	* Clear passage height LDH	
	Without operator	Operator WA 400 ***
LZ ≤ 5500		
Without wicket door	RM	RM
Wicket door with threshold	RM – 100	RM – 50
Wicket door without threshold rail	RM – 150	RM – 85
LZ > 5500		
Without wicket door	RM – 50	RM – 50
Wicket door with threshold	RM – 100	RM – 100
Wicket door without threshold rail	RM – 175	RM – 110

*** Or with chain hoist / hand pulley

Note:
The clearance required for fitting the door must be free of supply lines, heater fans, etc.

Door weights for roof loads:

SPU F42 / APU F42 Thermo / ALR F42 Thermo	= 320 N/m²
APU F42 / ALR F42	= 280 N/m²
ALR F42 Glazing	= 560 N/m²

Observe min. sideroom, see page 61.

	H	HT	WE	BW
NS 1	≥ 390	330	140	RM + 310
NS 2	≥ 440	380	160	RM + 335

Door height RM	Track height Min. LH	Track height Max. LH	
5000	5190	5810	NS 2
4875	5065	5685	NS 2
4750	4940	5560	NS 2
4625	4815	5435	NS 2
4500	4690	5310	NS 2
4375	4565	5175	NS 2
4250	4440	5030	NS 2
4125	4315	4885	NS 2
4000	4190	4730	NS 2
3875	4065	4585	NS 2
3750	3940	4440	NS 2
3625	3815	4295	NS 2
3500	3690	4150	NS 1
3375	3565	4005	NS 1
3250	3440	3860	NS 1
3125	3315	3715	NS 1
3000	3190	3570	NS 1
2875	3065	3425	NS 1
2750	2940	3280	NS 1
2625	2815	3135	NS 1
2500	2690	2990	NS 1
2375	2565	2845	NS 1
2250	2440	2700	NS 1
2125	2315	2555	NS 1
2000	2190	2410	NS 1
1875	2065	2265	NS 1

Note:
- Observe the permissible size ranges of the door types on pages 10 – 18 and 21 – 32 under all circumstances!
- ALR F42 Vitraplan and ALR F42 Glazing on request

H	Min. headroom (see page 42)	**LH**	Track height
ET	Min. distance back on request	**LDH**	Clear passage height
DH	Rear ceiling anchor on request	**LZ**	Clear frame dimensions (from 1200)
DM	Central ceiling anchor on request	**RM**	Grid height
DA	Min. distance to ceiling 250	**F**	Space for fitting the door
HT	Obstruction depth	**	Min.
L	Anchor length = DE – LH – 15 (see page 66)		On request
BW	Position of shaft support		
WE	Shaft centre from lintel		
HH	Obstruction height		
DE	Ceiling height		

Dimensions in mm

Track Application: GD

Normal track application
With inclination up to max. 27°
Minimum high-lift

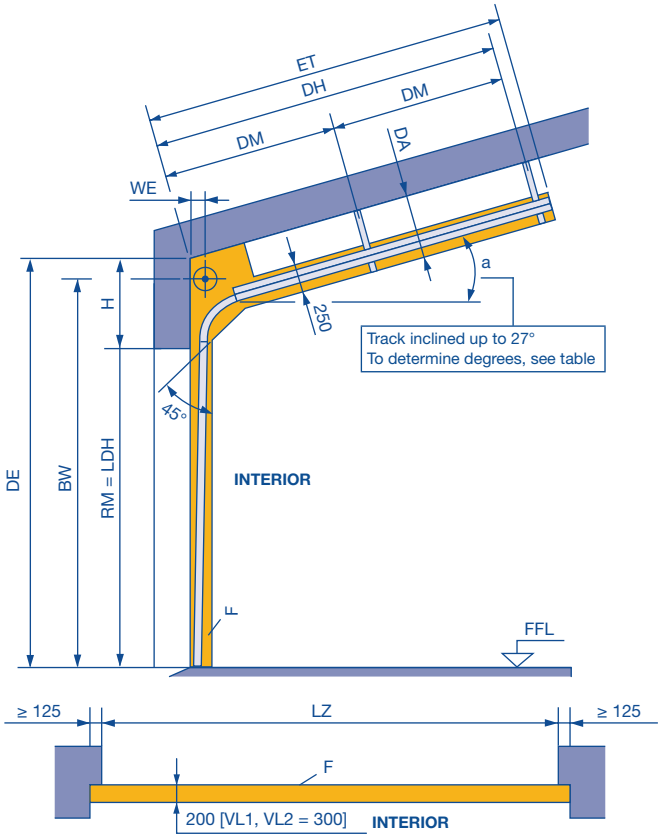

Door weights for roof loads:

SPU F42 / APU F42 Thermo / ALR F42 Thermo = 320 N/m²
APU F42 / ALR F42 = 280 N/m²
ALR F42 Glazing = 560 N/m²

Observe min. sideroom, see page 61.

	WE
GD 1	140
GD 2	160

ET = min. distance back		
GD 1 + 2	2 × RM – LH + 1120 – a° × 6.5	Manual operation with long spring buffer
	2 × RM – LH + 650 – a° × 6.5	a° > 5° and operator, with short spring buffer
	2 × RM – LH + 880 – a° × 6.5	a° ≤ 5° and operator, with long spring buffer

Only to determine the roof slope in degrees (a°)

a°	%	X (mm)	a°	%	X (mm)
1	1.75	17.5	15	26.79	267.9
2	3.49	34.9	16	28.67	286.7
3	5.24	52.4	17	30.57	305.7
4	6.99	69.9	18	32.49	324.9
5	8.75	87.5	19	34.43	344.3
6	10.51	105.1	20	36.40	364.0
7	12.28	122.8	21	38.39	383.9
8	14.05	140.5	22	40.40	404.0
9	15.84	158.4	23	42.45	424.5
10	17.63	176.3	24	44.52	445.2
11	19.44	194.4	25	46.63	466.3
12	21.26	212.6	26	48.77	487.7
13	23.09	230.9	27	50.95	509.5
14	24.93	249.3			

Notes:

- The clearance required for fitting the door must be free of supply lines, heater fans, etc.
- Observe the permissible size ranges of the door types on pages 10 – 18 and 21 – 32 under all circumstances!
- ALR F42 Vitraplan and ALR F42 Glazing on request

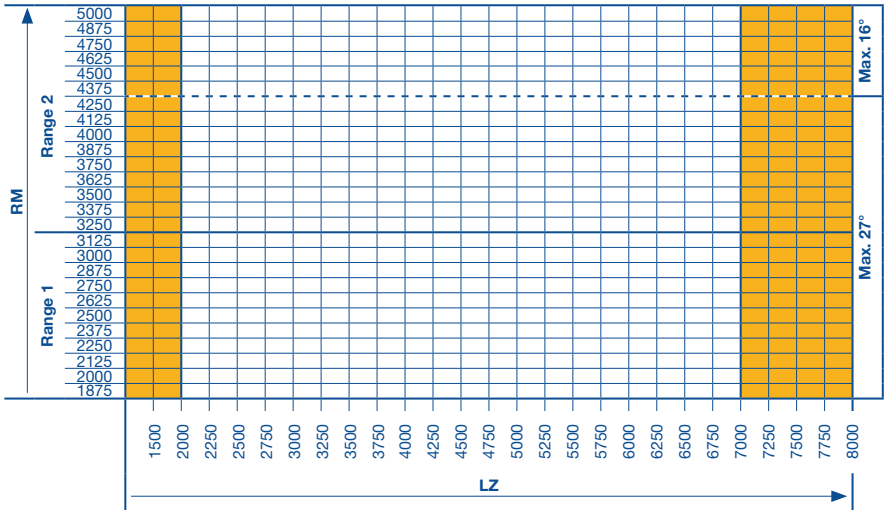

DH	Rear ceiling anchor GD 1 + GD 2 = 2 × RM – LH + 645 – a° × 6.5 (long spring buffer) GD 1 + GD 2 = 2 × RM – LH + 405 – a° × 6.5 (short spring buffer) GD 1 + GD 2 = 2 × RM – LH + 405 – a° × 6.5 (long spring buffer + operator)
DM	Central ceiling anchor = see page 66
H	Min. headroom (see page 42)
DA	Distance to ceiling on request
DE	Ceiling height
L	Anchor length on request (see page 66)
LDH	Clear passage height
LZ	Clear frame dimensions **(from 1200)**
ET	Min. distance back
RM	Grid height
F	Space for fitting the door

On request

Dimensions in mm

Track Application: L

Low headroom track application

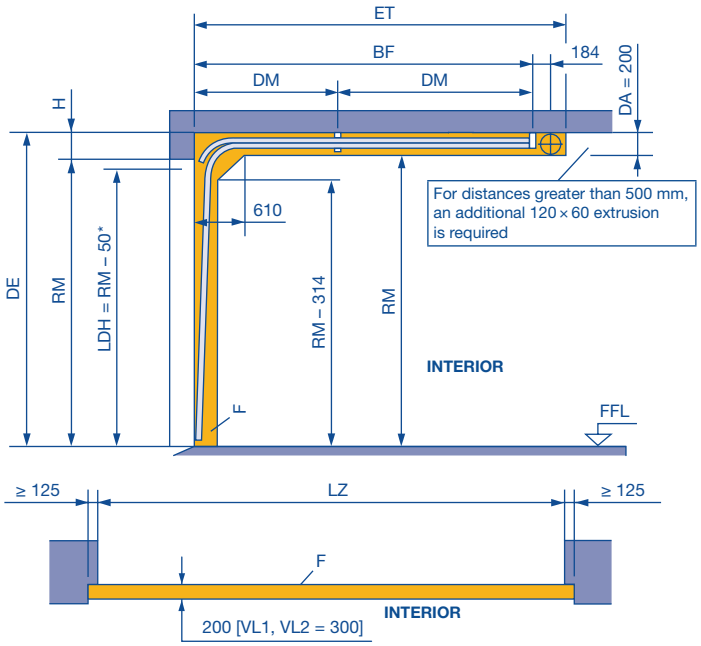

Door weights for roof loads:

SPU F42 / APU F42 Thermo / ALR F42 Thermo = 320 N/m²
APU F42 / ALR F42 = 280 N/m²
ALR F42 Glazing = 560 N/m²

Observe min. sideroom, see page 61.

Door operation:

- Manually operated: with rope or chain hoist (recommended for manual operation!)
- Power-driven: WA 400 with chain box, ITO 400 or SupraMatic H

	* Clear passage height LDH		
	Without operator	Operator	
		WA 400 **	WA 300 ***
LZ ≤ 5500			
Without wicket door	RM – 50	RM – 50	RM – 80
Wicket door with threshold	RM – 100	RM – 100	RM – 130
Wicket door without threshold rail	RM – 165	RM – 135	RM – 165
LZ > 5500			
Without wicket door	RM – 100	RM – 100	RM – 130
Wicket door with threshold	RM – 100	RM – 100	RM – 130
Wicket door without threshold rail	RM – 195	RM – 165	RM – 195

** Or with chain hoist / pull rope
*** Track application with inclination not possible!

Notes:

- The clearance required for fitting the door must be free of supply lines, heater fans, etc.
- Observe the permissible size ranges of the door types on pages 10 – 18 and 21 – 32 under all circumstances!
- ALR F42 Vitraplan and ALR F42 Glazing on request

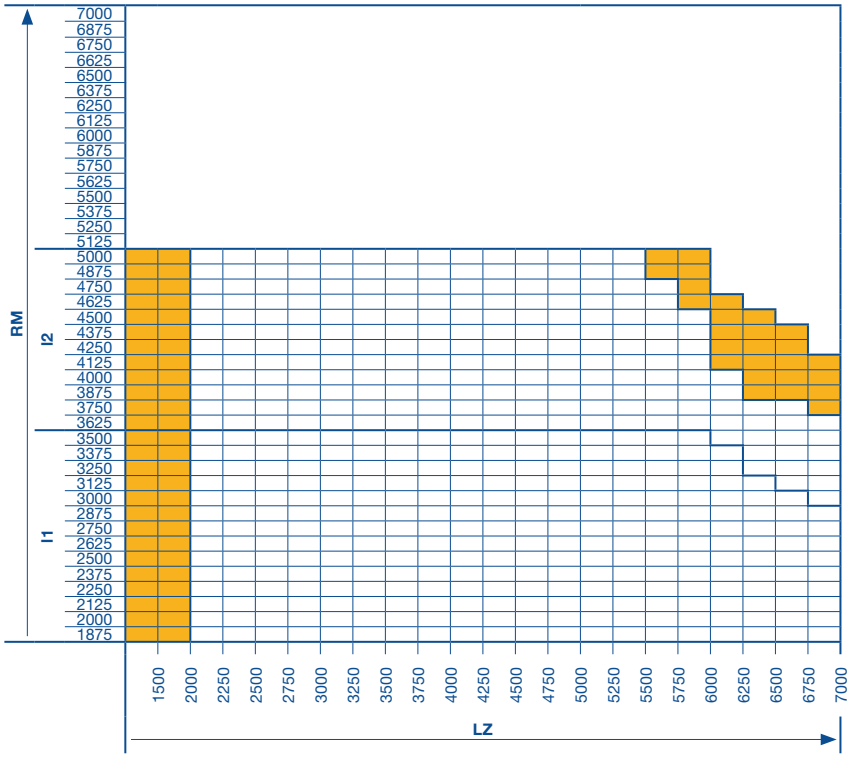

LDH Clear passage height
RM Grid height
BF Position of spring shaft = RM + 682
DM Central ceiling anchor
Up to RM 3500 = BF / 2
From RM 3510 = BF / 3
ET Min. distance back = RM + 990
H Min. headroom 200 (see page 42)
DA Distance to ceiling
DE Ceiling height
L Anchor length = DE – RM – 15 (see page 66)
LZ Clear frame dimensions **(from 1200)**
F Space for fitting the door

All door types available in any version.

All door types in any version on request.

Dimensions in mm

Track Application: LD

Low headroom track application
With inclination

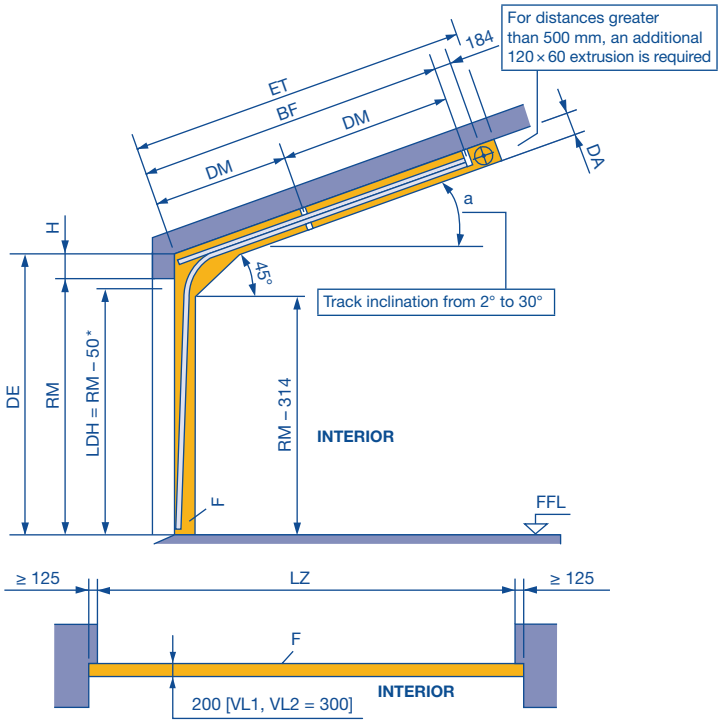

Door weights for roof loads:

SPU F42 / APU F42 Thermo / ALR F42 Thermo = 320 N/m²
APU F42 / ALR F42 = 280 N/m²
ALR F42 Glazing = 560 N/m²

Observe min. sideroom, see page 61.

Only to determine the roof slope in degrees (a°)

a°	%	X (mm)
2	3.49	34.9
4	6.99	69.9
6	10.51	105.1
8	14.05	140.5
10	17.63	176.3
12	21.26	212.6
14	24.93	249.3
16	28.67	286.7
18	32.49	324.9
20	36.40	364.0
22	40.40	404.0
24	44.52	445.2
26	48.77	487.7
28	53.17	531.7
30	57.74	577.4

*** Notes:**
- Clear passage height LDH, see track application L
- For door operation, see track application L

Notes:
- The clearance required for fitting the door must be free of supply lines, heater fans, etc.
- Observe the permissible size ranges of the door types on pages 10 – 18 and 21 – 32 under all circumstances!
- ALR F42 Vitraplan and ALR F42 Glazing on request

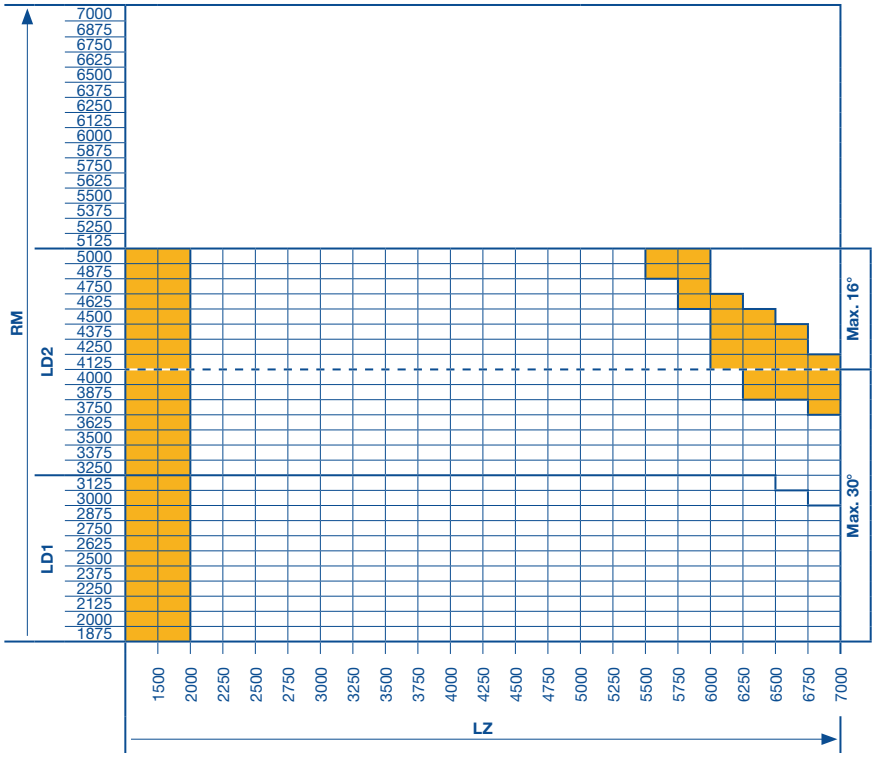

LDH Clear passage height
RM Grid height
ET Min. distance back
2° – 4° = RM + 990
6° – 16° = RM + 800
18° – 30° = RM + 740
H Min. headroom 200 (see page 42)
BF Position of spring shaft on request
DM Central ceiling anchor on request
DA Distance to ceiling on request
DE Ceiling height
L Anchor length on request (see page 66)
LZ Clear frame dimensions **(from 1200)**
F Space for fitting the door

All door types available in any version.

All door types in any version on request.

Dimensions in mm

Track Application: H

High-lift track application

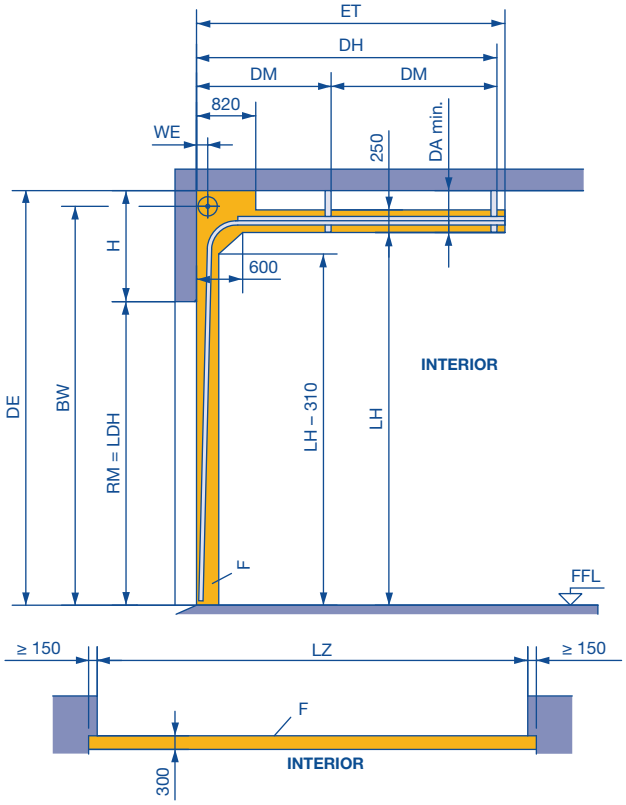

ET = min. distance back		
H 4+5	2 × RM – LH + 1120	For manual operation with long spring buffer (standard)
	2 × RM – LH + 650	For manual operation with short spring buffer (special)
	2 × RM – LH + 880	For shaft operator with long spring buffer (LH – RM) ≤ 1000
	2 × RM – LH + 650	For shaft operator with short spring buffer (LH – RM) > 1000
H 8	2 × RM – LH + 950	All versions

Observe min. sideroom, see page 61.

Table 2

Demarcation of track height for track application H

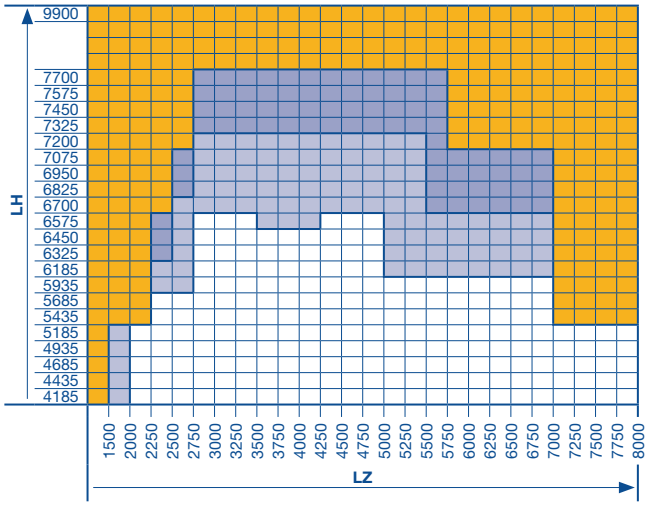

Please note:

1. Select required track height according to the door height in table 1.
2. Determine the intersection of the door width and track height using table 2.
3. Please check if, acc. to the explanations, a request is necessary.

Note:

The clearance required for fitting the door must be free of supply lines, heater fans, etc.

Table 1: Track heights (LH)

For track applications H, HD

Door height RM	Min. LH	Max. LH		Door height RM	Min. LH	Max. LH	
4500	4960	7800	H 5, WE = 180				
4375	4835	7675		7000	7460	9990	H 8, WE = 205 All door types and versions available on request.
4250	4710	7550		6875	7335	9990	
4125	4585	7425		6750	7210	9990	
4000	4460	7185		6625	7085	9990	
3875	4335	6935		6500	6960	9990	
3750	4210	6685		6375	6835	9775	
3625	4085	6435		6250	6710	9650	
3500	3960	6185	H 4, WE = 160	6125	6585	9525	
3375	3835	5935		6000	6460	9400	
3250	3710	5685		5875	6335	9275	
3125	3585	5435		5750	6210	9150	
3000	3460	5185		5625	6085	9025	
2875	3335	4935		5500	5960	8900	
2750	3210	4685		5375	5835	8775	
2625	3085	4435		5250	5710	8650	
2500	2960	4185		5125	5585	8525	
2375	2835	3935		5000	5460	8300	H 5, WE = 180
2250	2710	3685		4875	5335	8175	
2125	2585	3435		4750	5210	8050	
2000	2460	3185		4625	5085	7925	

Notes:

- Observe the permissible size ranges of the door types on pages 10 – 18 and 21 – 32 under all circumstances!
- ALR F42 Vitraplan and ALR F42 Glazing on request

LDH Clear passage height
RM Grid height
LH Track height (see Table 1+2)
BW Position of shaft support
H 4 + 5 = LH + 280, H 8 = LH + 305
DH Rear ceiling anchor
H 4 + H 5 = 2 × RM – LH + 645 (long spring buffer)
H 4 + H 5 = 2 × RM – LH + 405 (short spring buffer)
H 4 + H 5 = 2 × RM – LH + 405 (long spring buffer + operator)
H 8 = 2 × RM – LH + 485
DM Central ceiling anchor (see page 66)
WE Shaft centre from lintel (see table 1)
H Min. headroom (see page 42)
Min. DA H 4 = 420
H 5 = 450, 625 with double spring shaft
H 8 = 490, 650 with double spring shaft
L Anchor length DE – LH – 15 (see page 66)
DE Ceiling height
LZ Clear frame dimensions **(from 1200)**
ET Distance back
F Space for fitting the door

All door types available in any version.

All door types available, versions with glazing A3, B3, M3, S3, LB, P and / or wicket door on request.

Door types APU F42 S-Line, ALR F42 S-Line, APU F42 and ALR F42 are possible; APU F42 Thermo, ALR F42 Thermo and SPU F42 with thermo frames as well as versions with glazing A3, B3, M3, S3, LB, P and / or wicket door on request.

All door types in any version on request.

Dimensions in mm

Track Application: HA

High-lift track application
With high-mounted torsion spring shaft

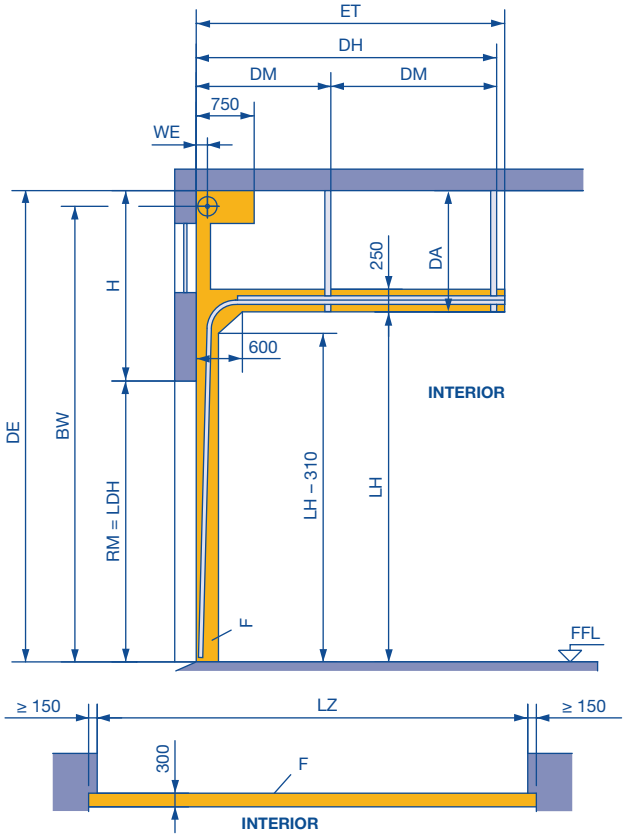

	ET = min. distance back	
HA 4	2 × RM – LH + 1120	For manual operation with long spring buffer (standard)
	2 × RM – LH + 650	For manual operation with short spring buffer (special)
	2 × RM – LH + 880	For shaft operator with long spring buffer (LH – RM) ≤ 1000
	2 × RM – LH + 650	For shaft operator with short spring buffer (LH – RM) > 1000

Observe min. sideroom, see page 61.

Table 4
Demarcation of track height for track application HA

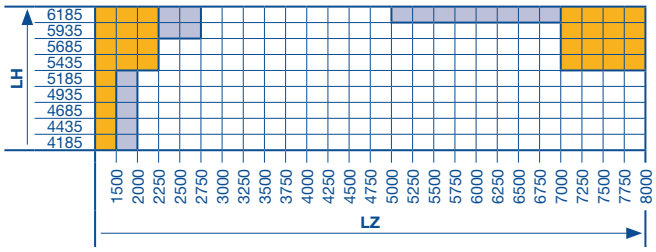

Please note:
1. Select required track height according to the door height in table 3.
2. Determine the intersection of the door width and track height using table 4.
3. Please check if, acc. to the explanations, a request is necessary.

Note:
The clearance required for fitting the door must be free of supply lines, heater fans, etc.

Table 3: Track heights (LH)
for track application HA

Door height RM	Min. LH	Max. LH	
3500	3960	6185	HA 4, WE = 160
3375	3835	5935	
3250	3710	5685	
3125	3585	5435	
3000	3460	5185	
2875	3335	4935	
2750	3210	4685	
2625	3085	4435	
2500	2960	4185	
2375	2835	3935	
2250	2710	3685	
2125	2585	3435	
2000	2460	3185	

Notes:
- Observe the permissible size ranges of the door types on pages 10 – 18 and 21 – 32 under all circumstances!
- ALR F42 Vitraplan and ALR F42 Glazing on request

LDH Clear passage height
RM Grid height
LH Track height (see Table 3+4)
BW Position of shaft support
Min. = HA 4 = LH + 280
Max. (8120) = HA 4 = DE – 140
DH Rear ceiling anchor
HA 4 = 2 × RM – LH + 645 (long spring buffer)
HA 4 = 2 × RM – LH + 405 (short spring buffer)
HA 4 = 2 × RM – LH + 405 (long spring buffer + operator)
DM Central ceiling anchor (see page 66)
WE Shaft centre from lintel (see table 3)
H Min. headroom (see page 42)
DA Distance to ceiling = HA 4 = min. 420
L Anchor length DE – LH – 15 (see page 66)
DE Ceiling height
LZ Clear frame dimensions **(from 1200)**
ET Distance back
F Space for fitting the door

All door types available in any version.

All door types available, versions with glazing A3, B3, M3, S3, LB, P and / or wicket door on request.

Door types APU F42 S-Line, ALR F42 S-Line, APU F42 and ALR F42 are possible; APU F42 Thermo, ALR F42 Thermo and SPU F42 with thermo frames as well as versions with glazing A3, B3, M3, S3, LB, P and / or wicket door on request.

All door types in any version on request.

Dimensions in mm

Track Application: HD

High-lift track application
With inclination

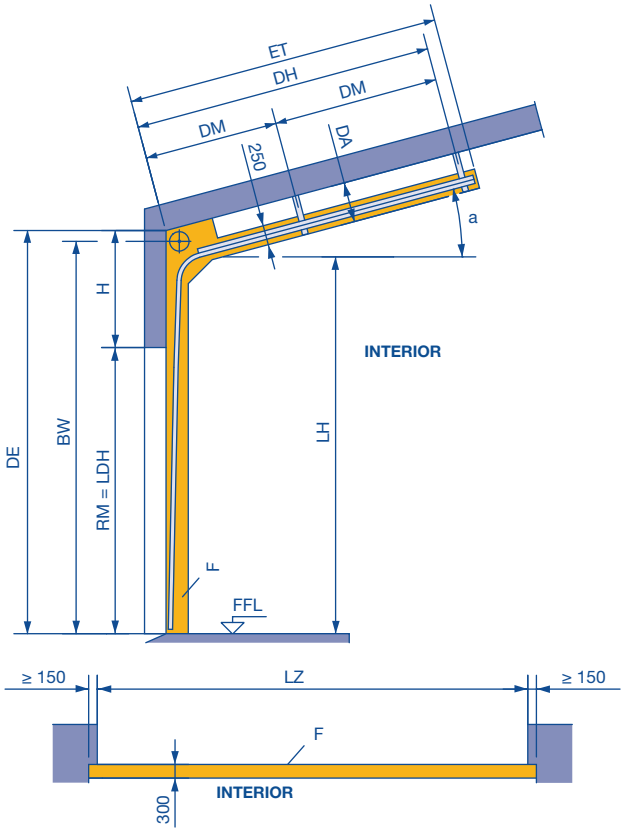

Notes:

- Observe the permissible size ranges of the door types on pages 10 – 18 and 21 – 32 under all circumstances!
- ALR F42 Vitraplan and ALR F42 Glazing on request

Table 5

Demarcation of track height for track application HD to 10°, Track application HD 11° to 30° on request!

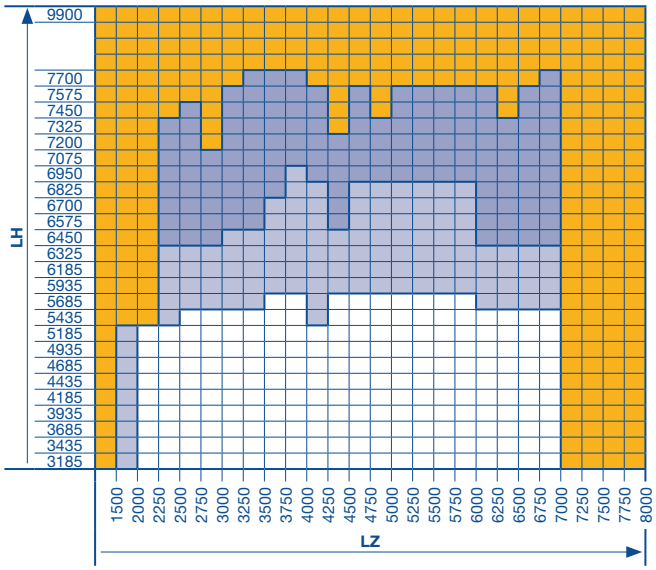

Please note:

1. Select required track height according to the door height in Table 1 on page 50.
2. Determine the intersection of the door width and track height using table 5.
3. Please check if, acc. to the explanations, a request is necessary.

Note:

The clearance required for fitting the door must be free of supply lines, heater fans, etc.

	ET = min. distance back	
HD 4 + 5	2 × RM – LH + 1120 – a° × 6.5	For manual operation with long spring buffer (standard)
HD 4 + 5	2 × RM – LH + 650 – a° × 6.5	For manual operation with short spring buffer (special)
HD 4 + 5	2 × RM – LH + 880 – a° × 6.5	For shaft operator with long spring buffer (LH – RM) ≤ 1000 and a° ≤ 5°
HD 4 + 5	2 × RM – LH + 650 – a° × 6.5	For shaft operator with short spring buffer (LH – RM) > 1000 or a° > 5°
HD 8	2 × RM – LH + 950 – a° × 6.5	All versions

See the high-lift track application for all other fitting dimensions.
Observe min. sideroom, see page 61.

Only to determine the roof slope in degrees (a°)

a°	%	X (mm)	a°	%	X (mm)
1	1.75	17.5	16	28.67	286.7
2	3.49	34.9	17	30.57	305.7
3	5.24	52.4	18	32.49	324.9
4	6.99	69.9	19	34.43	344.3
5	8.75	87.5	20	36.40	364.0
6	10.51	105.1	21	38.39	383.9
7	12.28	122.8	22	40.40	404.0
8	14.05	140.5	23	42.45	424.5
9	15.84	158.4	24	44.52	445.2
10	17.63	176.3	25	46.63	466.3
11	19.44	194.4	26	48.77	487.7
12	21.26	212.6	27	50.95	509.5
13	23.09	230.9	28	53.17	531.7
14	24.93	249.3	29	55.43	554.3
15	26.79	267.9	30	57.74	577.4

DA Distance to ceiling on request
L Anchor length DE – L + 140 (see page 66)
LH Track height (see Table 1 on page 50 and Table 5)
H Min. headroom (see page 42)
BW Position of shaft support
HD 4 + 5 = LH + 280, HD 8 = LH + 305
DH Rear ceiling anchor
HD 4 + HD 5 = 2 × RM – LH + 645 – a° × 6.5 (long spring buffer)
HD 4 + HD 5 = 2 × RM – LH + 405 – a° × 6.5 (short spring buffer)
HD 4 + HD 5 = 2 × RM – LH + 405 – a° × 6.5 (long spring buffer + operator)
HD 8 = 2 × RM – LH + 485
DM Central ceiling anchor on request
WE Shaft centre from lintel (see Table 1 on page 50)
DE Ceiling height
LDH Clear passage height
LZ Clear frame dimensions **(from 1200)**
ET Distance back
RM Grid height
F Space for fitting the door

All door types available in any version.

All door types available, versions with glazing A3, B3, M3, S3, LB, P and / or wicket door on request.

Door types APU F42 S-Line, ALR F42 S-Line, APU F42 and ALR F42 are possible; APU F42 Thermo, ALR F42 Thermo and SPU F42 with thermo frames as well as versions with glazing A3, B3, M3, S3, LB, P and / or wicket door on request.

All door types in any version on request.

Dimensions in mm

Track Application: HG

High-lift application
With steep track
(Application for loading ramp doors)

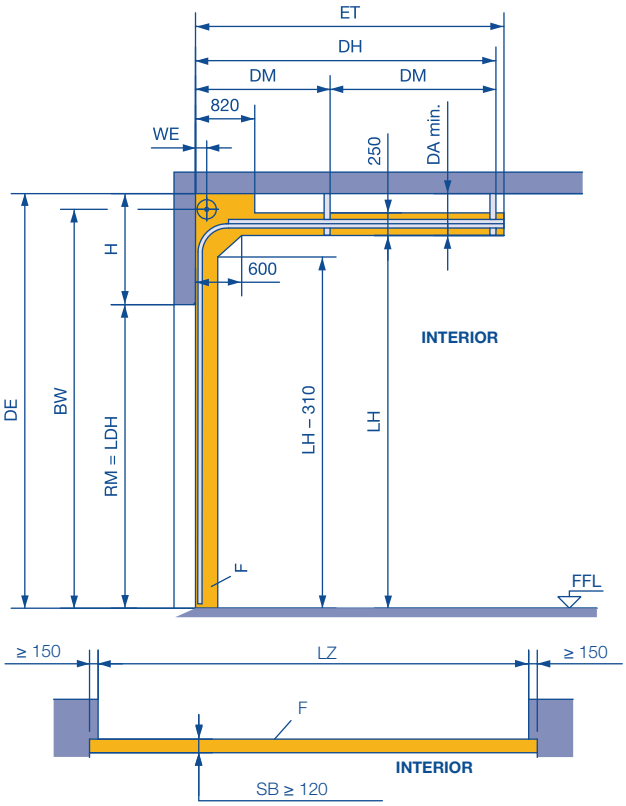

	ET = min. distance back	
HG 4 + 5	2 × RM – LH + 1120	For manual operation with long spring buffer (standard)
	2 × RM – LH + 650	For manual operation with short spring buffer (special)
	2 × RM – LH + 880	For shaft operator with long spring buffer (LH – RM) ≤ 1000
	2 × RM – LH + 650	For shaft operator with short spring buffer (LH – RM) > 1000

Other versions on request.
Observe min. sideroom, see page 61.

Table 7
Demarcation of track height for track application HG

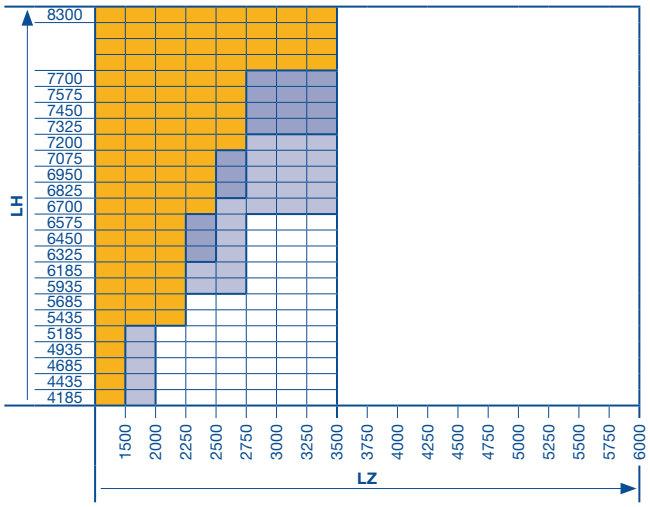

Please note:
1. Select required track height according to the door height in table 6.
2. Determine the intersection of the door width and track height using table 7.
3. Please check if, acc. to the explanations, a request is necessary.

Notes:
- **Door types APU F42 S-Line / ALR F42 S-Line / ALR F42 Glazing, doors with real glass infill and wicket doors are not possible!**
- The clearance required for fitting the door must be free of supply lines, heater fans, etc.

Table 6: Track heights (LH)
For track application HG

Door height RM	Min. LH	Max. LH	
5000	5460	8300	HG 5, WE = 180
4875	5335	8175	
4750	5210	8050	
4625	5085	7925	
4500	4960	7800	
4375	4835	7675	
4250	4710	7550	
4125	4585	7425	
4000	4460	7185	
3875	4335	6935	
3750	4210	6685	
3625	4085	6435	
3500	3960	6185	HG 4, WE = 160
3375	3835	5935	
3250	3710	5685	
3125	3585	5435	
3000	3460	5185	
2875	3335	4935	
2750	3210	4685	
2625	3085	4435	
2500	2960	4185	
2375	2835	3935	

Notes:
- Observe the permissible size ranges of the door types on pages 10 – 18 and 21 – 32 under all circumstances!
- ALR F42 Vitraplan on request

LDH Clear passage height
RM Grid height
LH Track height (see Table 6)
DH Rear ceiling anchor =
HG 4 + HG 5 = 2 × RM – LH + 645 (long spring buffer)
HG 4 + HG 5 = 2 × RM – LH + 405 (short spring buffer)
HG 4 + HG 5 = 2 × RM – LH + 405 (long spring buffer + operator)
DM Central ceiling anchor (see page 66)
WE Shaft centre from lintel (see table 6)
H Min. headroom (see page 42)
Min. DA HG 4 = 420
HG 5 = 450, 625 with double spring shaft
SB Slot width
L Anchor length DE – LH – 15 (see page 66)
ET Distance back
DE Ceiling height
LZ Clear frame dimensions **(from 1200)**
F Space for fitting the door

All door types available in any version.

All door types available, versions with glazing A3, B3, M3, S3, LB, P on request.

Door types APU F42 S-Line, ALR F42 S-Line, APU F42 and ALR F42 are possible; APU F42 Thermo, ALR F42 Thermo and SPU F42 with thermo frames as well as versions with glazing A3, B3, M3, S3, LB, P must be requested.

All door types in any version on request.

Dimensions in mm

Track Application: HU

High-lift track application
With low-mounted torsion spring shaft

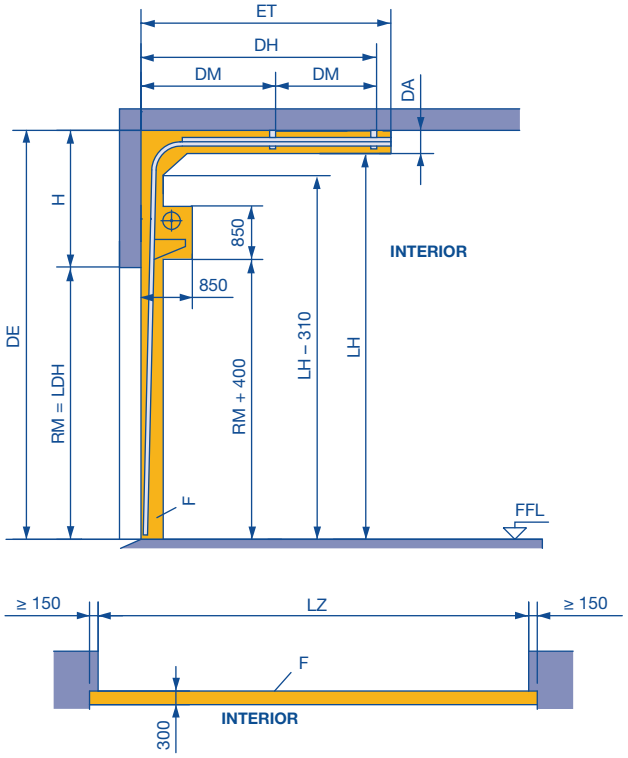

	ET = min. distance back	
HU 4 + 5	2 × RM – LH + 1120	For manual operation with long spring buffer (standard)
	2 × RM – LH + 650	For manual operation with short spring buffer (special)
	2 × RM – LH + 650	For shaft operator with short spring buffer = (LH – RM ≥ 1510)

Other versions on request.
Observe min. sideroom, see page 61.

Table 7
Demarcation of track height for track application HU

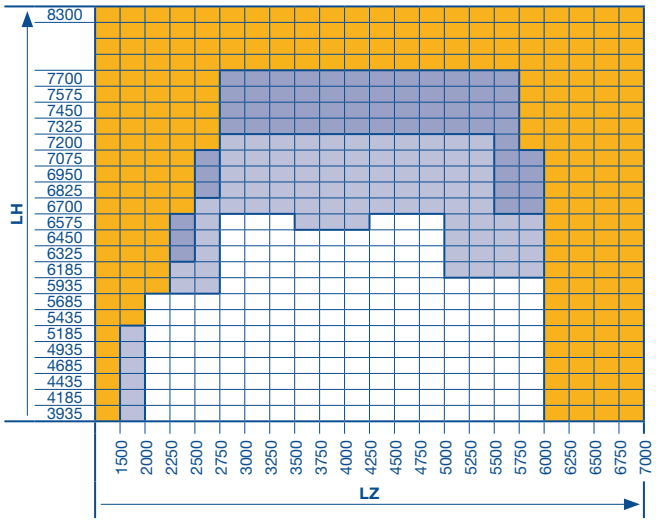

Please note:
1. Select required track height according to the door height in table 6.
2. Determine the intersection of the door width and track height using table 7.
3. Please check if, acc. to the explanations, a request is necessary.

Note:
The clearance required for fitting the door must be free of supply lines, heater fans, etc.

Table 6: Track heights (LH)
For track application HU

Door height RM	Min. LH	Max. LH	
5000	6510	8300	HU 5, WE = 335
4875	6385	8175	
4750	6260	8050	
4625	6135	7925	
4500	6010	7800	
4375	5885	7675	
4250	5760	7550	
4125	5635	7425	
4000	5510	7185	
3875	5385	6935	
3750	5260	6685	
3625	5135	6435	
3500	5010	6185	HU 4, WE = 315
3375	4885	5935	
3250	4760	5685	
3125	4635	5435	
3000	4510	5185	
2875	4385	4935	
2750	4260	4685	
2625	4135	4435	
2500	4010	4185	
2375	3885	3935	

Notes:
- Observe the permissible size ranges of the door types on pages 10 – 18 and 21 – 32 under all circumstances!
- ALR F42 Vitraplan and ALR F42 Glazing on request

DE Ceiling height
LDH Clear passage height
RM Grid height
LH Track height (see Table 6)
DH Rear ceiling anchor
HU 4 + HU 5 = 2 × RM – LH + 645 (long spring buffer)
HU 4 + HU 5 = 2 × RM – LH + 405 (short spring buffer)
HU 4 + HU 5 = 2 × RM – LH + 405 (long spring buffer + operator)
DM Central ceiling anchor (see page 66)
WE Shaft centre from lintel (see table 6)
H Min. headroom (see page 42)
DA Min. distance to ceiling 250
L Anchor length DE – LH – 15 (see page 66)
LZ Clear frame dimensions **(from 1200)**
ET Distance back
F Space for fitting the door

All door types available in any version.

All door types available, versions with glazing A3, B3, M3, S3, LB, P and / or wicket door on request.

Door types APU F42 S-Line, ALR F42 S-Line, APU F42 and ALR F42 are possible; APU F42 Thermo, ALR F42 Thermo and SPU F42 with thermo frames as well as versions with glazing A3, B3, M3, S3, LB, P and / or wicket door on request.

All door types in any version on request.

Dimensions in mm

Track Application: RD

High-lift track application
With low-mounted torsion spring shaft and inclination

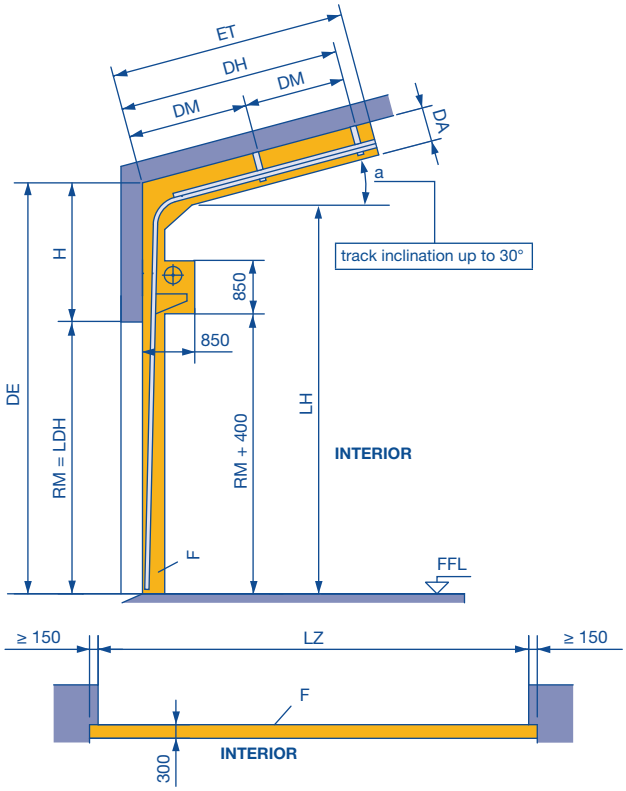

Notes:
- Observe the permissible size ranges of the door types on pages 10 – 18 and 21 – 32 under all circumstances!
- ALR F42 Vitraplan and ALR F42 Glazing on request request

Table 8
Demarcation of track height for track application RD to 10°, Track application RD 11° to 30° on request!

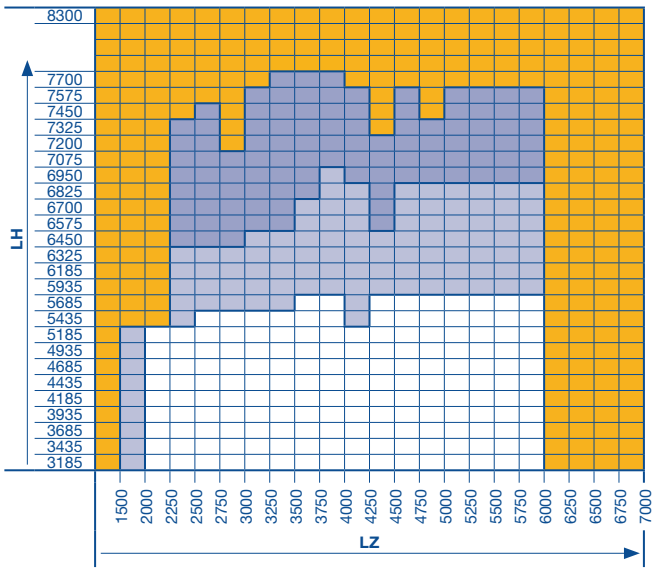

Please note:
1. Select required track height according to the door height in Table 6 on page 54.
2. Determine the intersection of the door width and track height using table 8.
3. Please check if, acc. to the explanations, a request is necessary.

Note:
The clearance required for fitting the door must be free of supply lines, heater fans, etc.

	ET = min. distance back	
RD 4 + 5	2 × RM – LH + 1120 – a° × 6.5	For manual operation with long spring buffer (standard)
	2 × RM – LH + 650 – a° × 6.5	For manual operation with short spring buffer (special)
	2 × RM – LH + 880 – a° × 6.5	For shaft operator with long spring buffer = (LH – RM) ≤ 1000 and a° ≤ 5°
	2 × RM – LH + 650 – a° × 6.5	For shaft operator with short spring buffer = (LH – RM) > 1000 or a° > 5°

See the high-lift track application with inclination for all other fitting dimensions.
Observe min. sideroom, see page 61.

Only to determine the roof slope in degrees (a°)

a°	%	X (mm)	a°	%	X (mm)
1	1.75	17.5	16	28.67	286.7
2	3.49	34.9	17	30.57	305.7
3	5.24	52.4	18	32.49	324.9
4	6.99	69.9	19	34.43	344.3
5	8.75	87.5	20	36.40	364.0
6	10.51	105.1	21	38.39	383.9
7	12.28	122.8	22	40.40	404.0
8	14.05	140.5	23	42.45	424.5
9	15.84	158.4	24	44.52	445.2
10	17.63	176.3	25	46.63	466.3
11	19.44	194.4	26	48.77	487.7
12	21.26	212.6	27	50.95	509.5
13	23.09	230.9	28	53.17	531.7
14	24.93	249.3	29	55.43	554.3
15	26.79	267.9	30	57.74	577.4

DE Ceiling height
L Anchor length DE – L – 15 (see page 66)
LH Track height (see Table 6 on page 54)
H Min. headroom (see page 42)
DH Rear ceiling anchor=
RD 4 + RD 5 = 2 × RM – LH + 645 – a° × 6.5 (long spring buffer)
RD 4 + RD 5 = 2 × RM – LH + 405 – a° × 6.5 (short spring buffer)
RD 4 + RD 5 = 2 × RM – LH + 405 – a° × 6.5 (long spring buffer + operator)
DM Central ceiling anchor (see page 66)
WE Shaft centre from lintel (see Table 6 on page 54)
DA Distance to ceiling on request
LDH Clear passage height
LZ Clear frame dimensions **(from 1200)**
RM Grid height
F Space for fitting the door

All door types available in any version.

All door types available, versions with glazing A3, B3, M3, S3, LB, P and / or wicket door on request.

Door types APU F42 S-Line, ALR F42 S-Line, APU F42 and ALR F42 are possible; APU F42 Thermo, ALR F42 Thermo and SPU F42 with thermo frames as well as versions with glazing A3, B3, M3, S3, LB, P and / or wicket door must be requested.

All door types in any version on request.

Dimensions in mm

Track Application: RG

High-lift track application
With low-mounted torsion spring shaft and steep track
(Application for loading ramp doors)

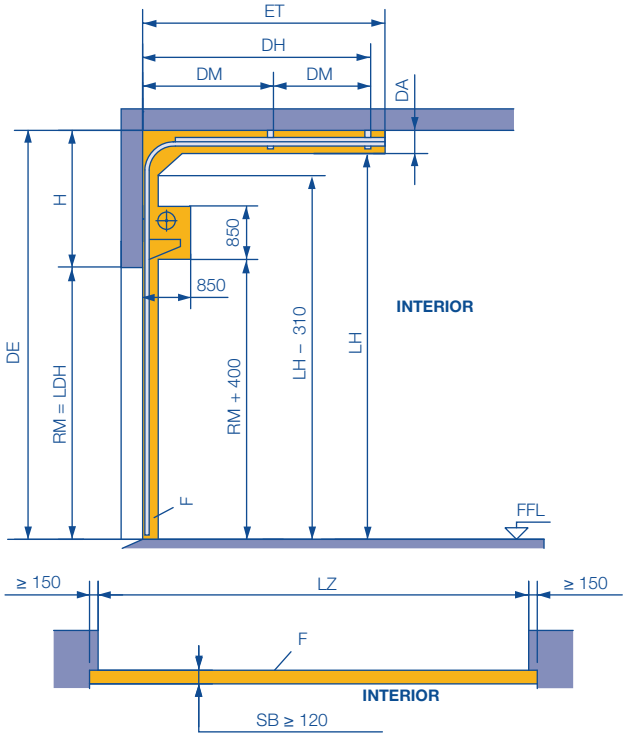

	ET = min. distance back	
RG 4 + 5	2 × RM – LH + 1120	For manual operation with long spring buffer (standard)
	2 × RM – LH + 650	For manual operation with short spring buffer (special)
	2 × RM – LH + 650	For shaft operator with short spring buffer = (LH – RM ≥ 1510)

Other versions on request.
Observe min. sideroom, see page 61.

Table 10
Demarcation of track height for track application RG

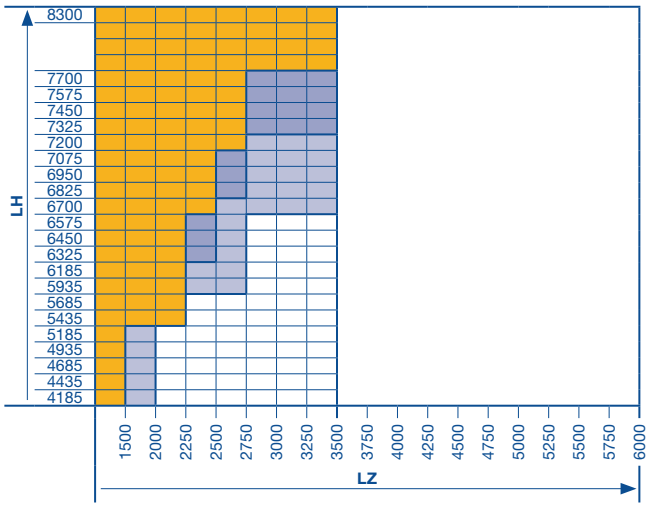

Please note:
1. Select required track height according to the door height in table 9.
2. Determine the intersection of the door width and track height using table 10.
3. Please check if, acc. to the explanations, a request is necessary.

Notes:
- **Door types APU F42 S-Line / ALR F42 S-Line and wicket doors are not possible!**
- The clearance required for fitting the door must be free of supply lines, heater fans, etc.

Table 9: Track heights (LH)
For track application RG

Door height RM	Min. LH	Max. LH	
5000	6510	8300	RG 5, WE = 276
4875	6385	8175	
4750	6260	8050	
4625	6135	7925	
4500	6010	7800	
4375	5885	7675	
4250	5760	7550	
4125	5635	7425	
4000	5510	7185	
3875	5385	6935	
3750	5260	6685	
3625	5135	6435	
3500	5010	6185	RG 4, WE = 246
3375	4885	5935	
3250	4760	5685	
3125	4635	5435	
3000	4510	5185	
2875	4385	4935	
2750	4260	4685	
2625	4135	4435	
2500	4010	4185	
2375	3885	3935	

Notes:
- Observe the permissible size ranges of the door types on pages 10 – 18 and 21 – 32 under all circumstances!
- ALR F42 Vitraplan and ALR F42 Glazing on request

LDH Clear passage height
RM Grid height
LH Track height (see Table 9)
DH Rear ceiling anchor =
RG 4 + RG 5 = 2 × RM – LH + 580 (long spring buffer)
RG 4 + RG 5 = 2 × RM – LH + 340 (short spring buffer)
RG 4 + RG 5 = 2 × RM – LH + 340 (long spring buffer + WA 400)
DM Central ceiling anchor (see page 66)
WE Shaft centre from lintel (see table 9)
H Min. headroom (see page 42)
DA Min. distance to ceiling 250
SB Slot width
L Anchor length DE – LH – 15 (see page 66)
ET Distance back
DE Ceiling height
LZ Clear frame dimensions **(from 1200)**
F Space for fitting the door

All door types available in any version.

All door types available, versions with glazing A3, B3, M3, S3, LB, P on request.

Door types APU F42 S-Line, ALR F42 S-Line, APU F42 and ALR F42 are possible; APU F42 Thermo, ALR F42 Thermo and SPU F42 with thermo frames as well as versions with glazing A3, B3, M3, S3, LB, P must be requested.

All door types in any version on request.

Dimensions in mm

Track Application: V

Vertical track application

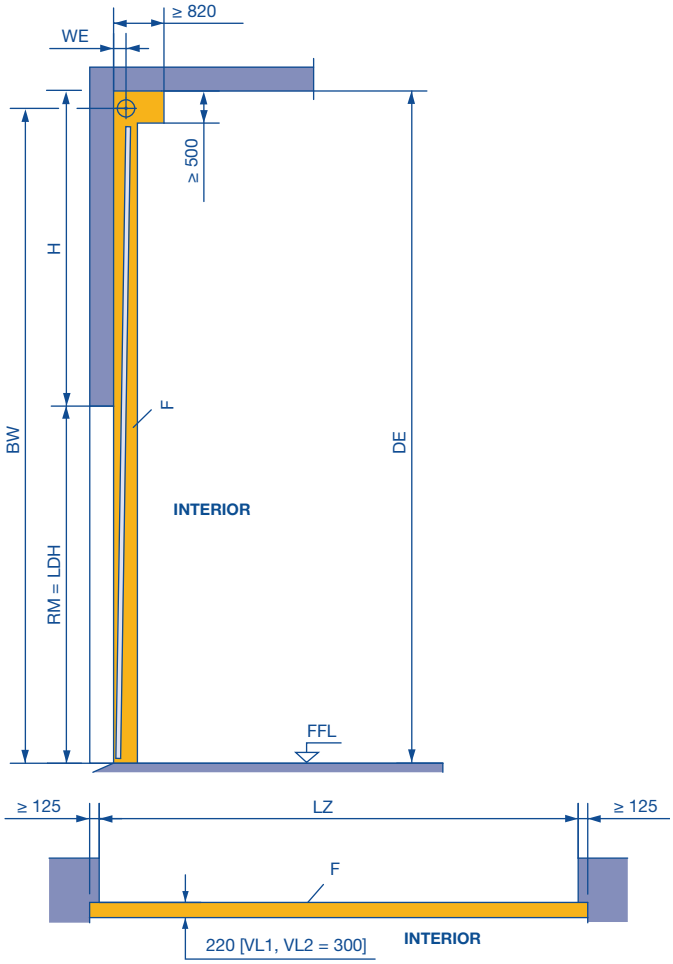

Notes:

- The clearance required for fitting the door must be free of supply lines, heater fans, etc.
- Observe the permissible size ranges of the door types on pages 10 – 18 and 21 – 32 under all circumstances!

Observe min. sideroom, see page 61.

LDH Clear passage height
RM Grid height
WE Shaft centre from lintel
V 6 = 160, V 7 = 180
H Min. headroom (see page 42)
DE Ceiling height
2 × RM + 500 (V 6)
2 × RM + 540 (V 7)
2 × RM + 730 (V 7 with double spring shaft)
2 × RM + 635 (V 9)
2 × RM + 780 (V 9 with double spring shaft)
BW Position of shaft support
2 × RM + 360 (V 6)
2 × RM + 385 (V 7)
2 × RM + 435 (V 9)
LZ Clear frame dimensions **(from 1200)**
F Space for fitting the door

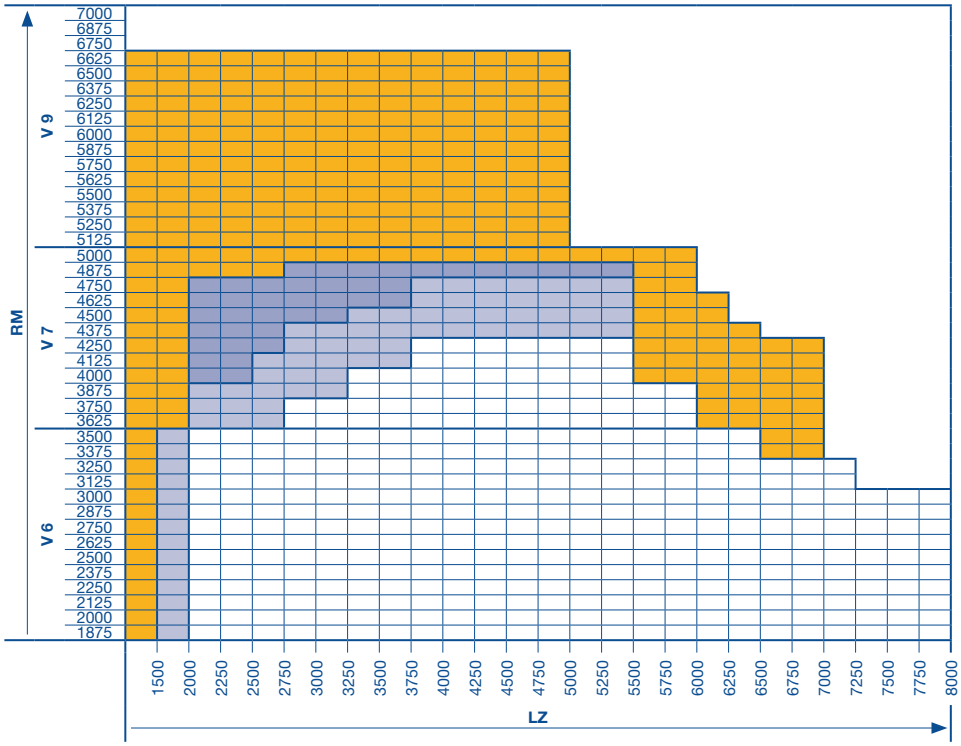

Note:
ALR F42 Vitraplan and ALR F42 Glazing on request

All door types available in any version.

All door types available, versions with glazing A3, B3, M3, S3, LB, P and / or wicket door on request.

Door types APU F42 S-Line, ALR F42 S-Line, APU F42 and ALR F42 are possible; APU F42 Thermo, ALR F42 Thermo and SPU F42 with thermo frames as well as versions with glazing A3, B3, M3, S3, LB, P and / or wicket door on request.

All door types in any version on request.

Dimensions in mm

Track Application: VA

Vertical track application
With high-mounted torsion spring shaft

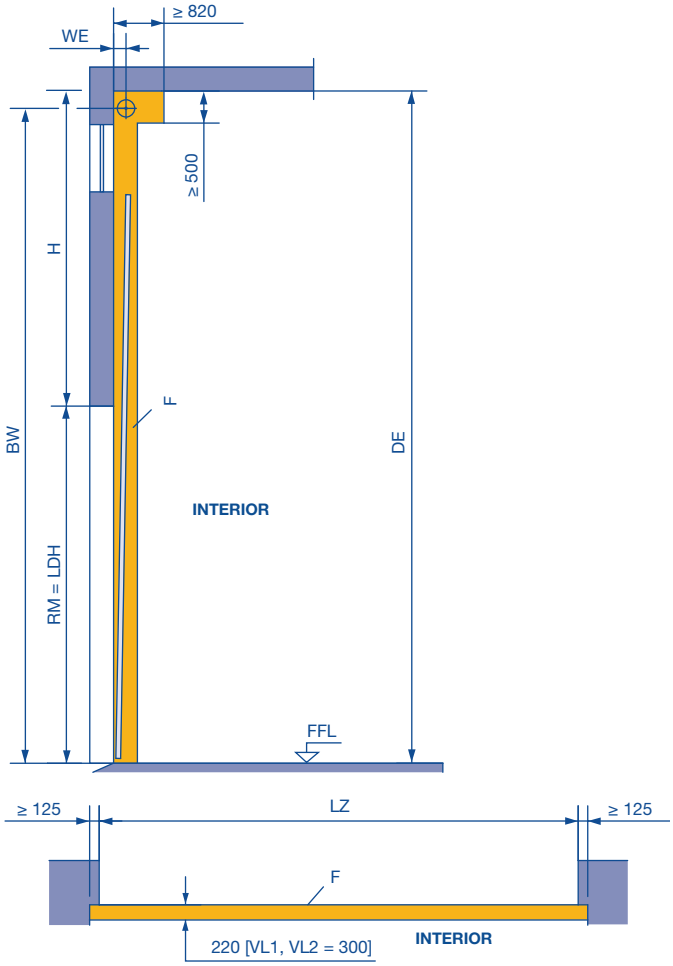

Notes:

- The clearance required for fitting the door must be free of supply lines, heater fans, etc.
- Observe the permissible size ranges of the door types on pages 10 – 18 and 21 – 32 under all circumstances!

Observe min. sideroom, see page 61.

LDH Clear passage height
RM Grid height
WE Shaft centre from lintel
VA 6 = 160
H Min. headroom (see page 42)
DE Ceiling height
Min.: 2 × RM + 510 (VA 6)
Max.: depends on order
BW Position of shaft support=
Min.: 2 × RM + 370 (VA 6)
Max.: 7895 = DE – 140
LZ Clear frame dimensions **(from 1200)**
F Space for fitting the door

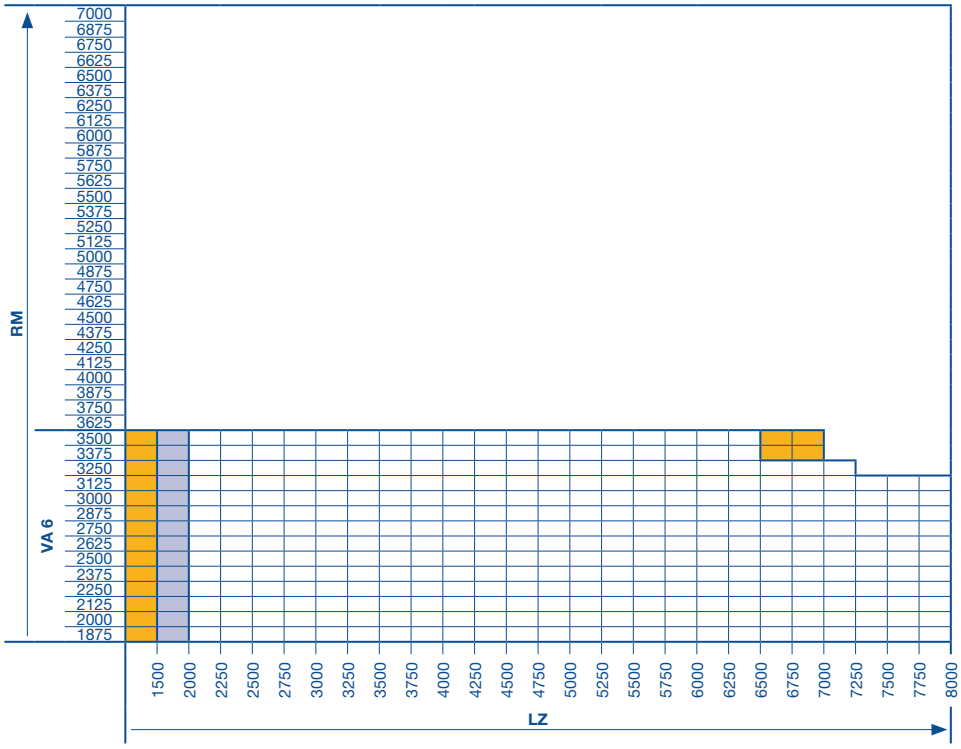

Note:
ALR F42 Vitraplan and
ALR F42 Glazing on request

All door types available in any version.

All door types available, versions with glazing A3, B3, M3, S3, LB, P and / or wicket door on request.

All door types in any version on request.

Dimensions in mm

Track Application: VU

Vertical track application
With low-mounted torsion spring shaft

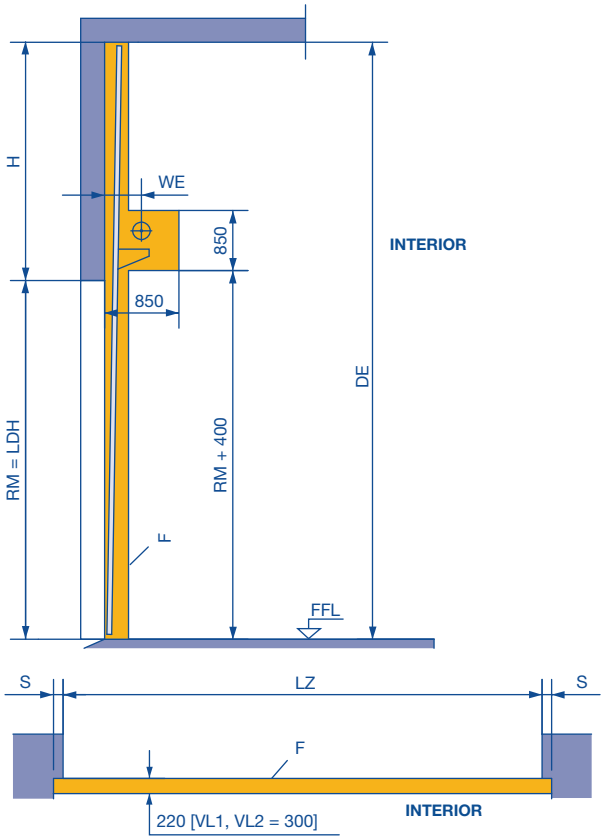

Notes:
- The clearance required for fitting the door must be free of supply lines, heater fans, etc.
- Observe the permissible size ranges of the door types on pages 10 – 18 and 21 – 32 under all circumstances!

Track application	S
VU 6	125
VU 7, VU 9	140

Observe min. sideroom, see page 61.

DE Ceiling height = 2 × RM + 350
WE Shaft centre from lintel
VU 6 = 315
VU 7 = 335
VU 9 = 375
H Min. headroom (see page 42)
LDH Clear passage height
RM Grid height
LZ Clear frame dimensions **(from 1200)**
F Space for fitting the door
S Min. sideroom

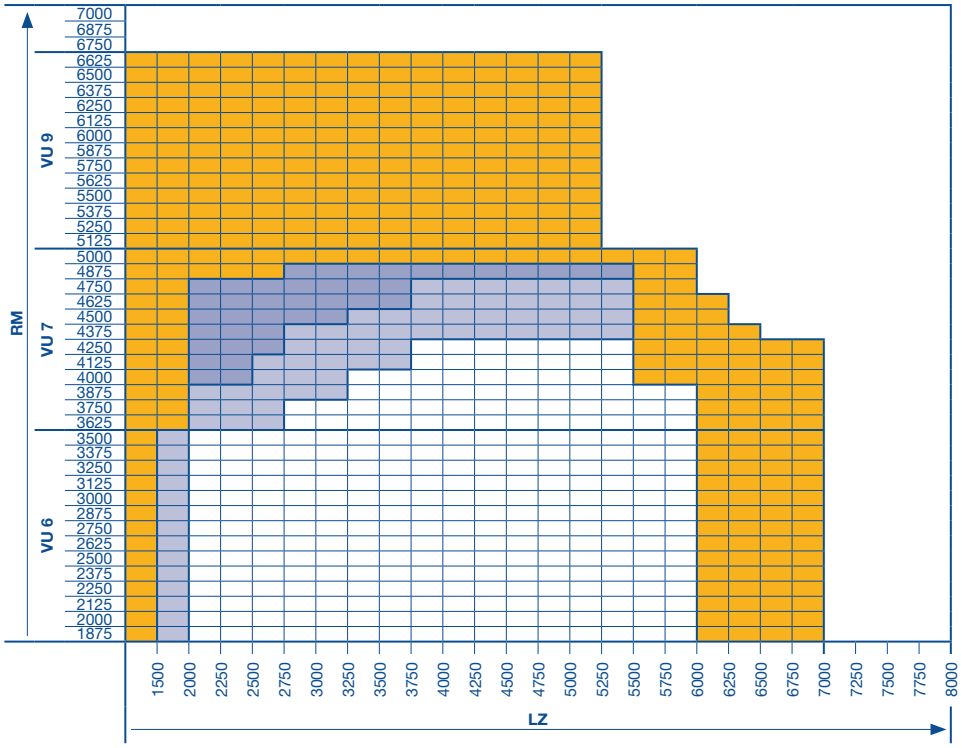

Note:
ALR F42 Vitraplan and ALR F42 Glazing on request

All door types available in any version.

All door types available, versions with glazing A3, B3, M3, S3, LB, P and / or wicket door on request.

Door types APU F42 S-Line, ALR F42 S-Line, APU F42 and ALR F42 are possible; APU F42 Thermo, ALR F42 Thermo and SPU F42 with thermo frames as well as versions with glazing A3, B3, M3, S3, LB, P and / or wicket door on request.

All door types in any version on request.

Dimensions in mm

Track Application: WG

Vertical track application
With low-mounted torsion spring shaft and steep track
(Application for loading ramp doors)

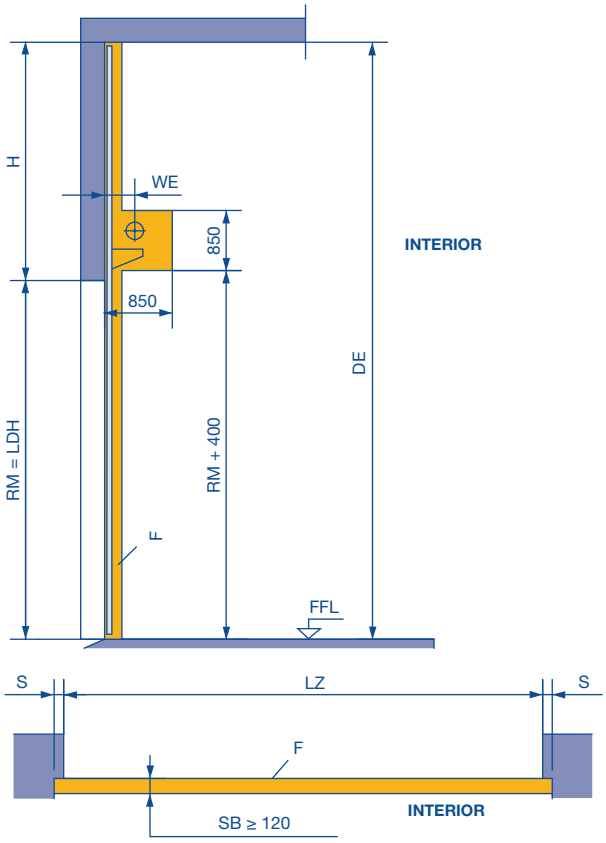

Notes:

- **Door types APU F42 S-Line / ALR F42 S-Line and wicket doors are not possible!**
- The clearance required for fitting the door must be free of supply lines, heater fans, etc.
- Observe the permissible size ranges of the door types on pages 10 – 18 and 21 – 32 under all circumstances!

Track application	S
WG 6	125
WG 7	140

Observe min. sideroom, see page 61.

DE Ceiling height = 2 × RM + 350
WE Shaft centre from lintel
WG 6 = 246
WG 7 = 276
H Min. headroom (see page 42)
SB Slot width
LDH Clear passage height
RM Grid height
LZ Clear frame dimensions **(from 1200)**
F Space for fitting the door
S Min. sideroom

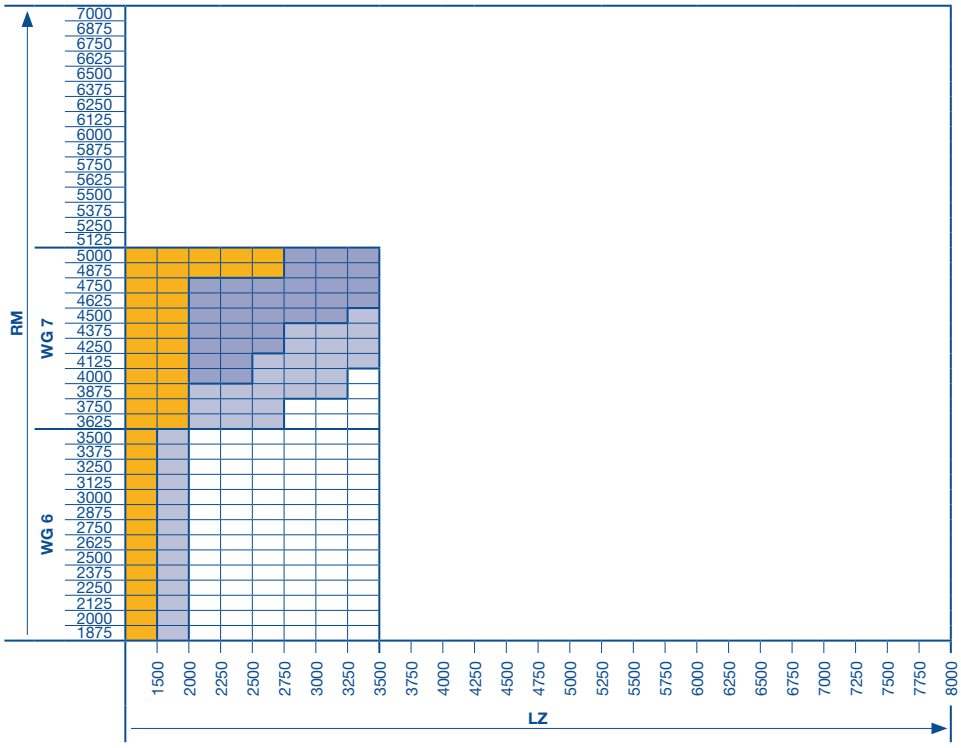

Note:
ALR F42 Vitraplan and ALR F42 Glazing on request

All door types available in any version.

All door types available, versions with glazing A3, B3, M3, S3, LB, P on request.

Door types APU F42 S-Line, ALR F42 S-Line, APU F42 and ALR F42 are possible; APU F42 Thermo, ALR F42 Thermo and SPU F42 with thermo frames as well as versions with glazing A3, B3, M3, S3, LB, P must be requested.

All door types in any version on request.

Dimensions in mm

Sideroom

Required sideroom S

Track application / designation	S	Track application / designation		S
N, NA, ND, NH, NS, GD, V, VA, VU, WG	125	Hand pulley	N, NA, ND, NH, NS, GD	140
H, HA, HD, HG, HU, RD, RG	150		H, HA, HD, HG, HU, RD, RG	150
L, LD	125		V, VA, VU, WG	125
		Chain hoist		Page 64
		Shaft operators		Pages 67 – 73

Sideroom

ThermoFrame version

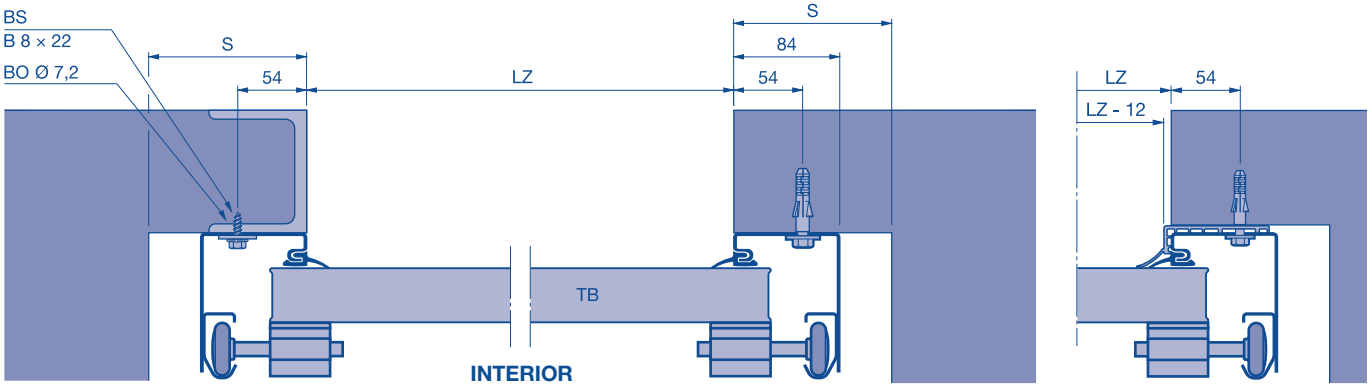

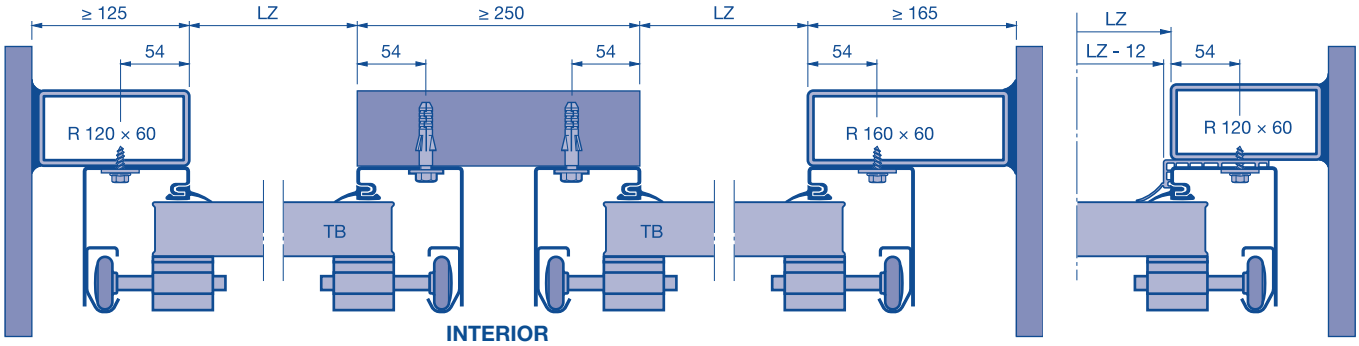

Sideroom with frame covering

ThermoFrame version

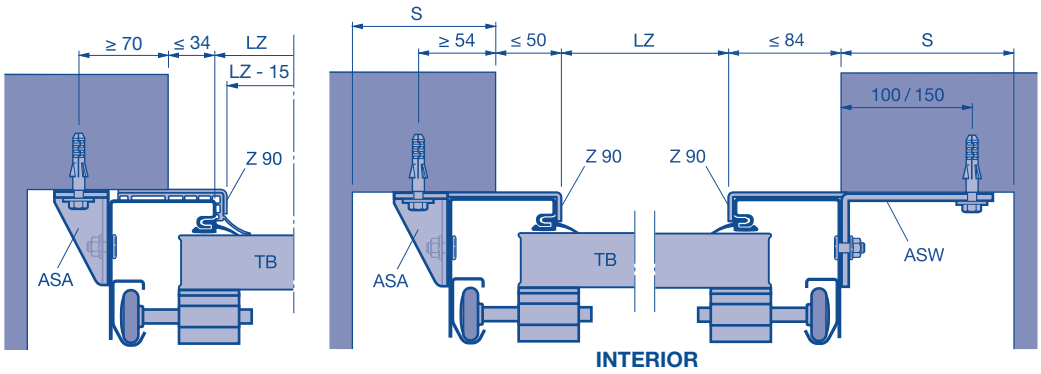

ThermoFrame version

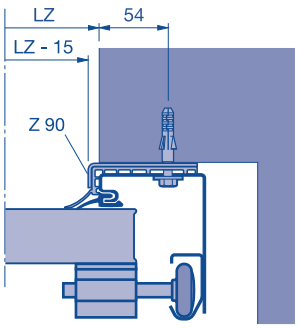

LZ	Clear frame dimensions	**TB**	Door leaf	**ASW**	Screw-on bracket 70 × 120 / 170
BO	Hole	**R**	Tube		
HS	Self-tapping screw	**ASA**	Screw-on anchor 70 × 40		

Lintel Fitting

Normal lintel fitting
Lintel variation up to 30 mm high

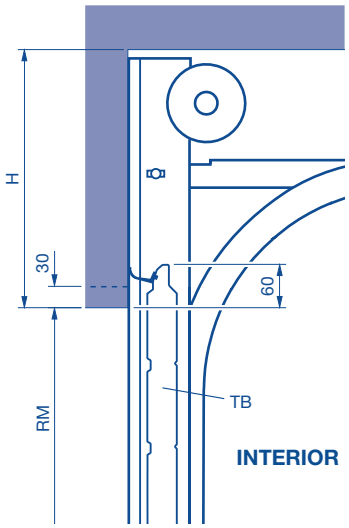

Normal lintel fitting
Double spring shaft

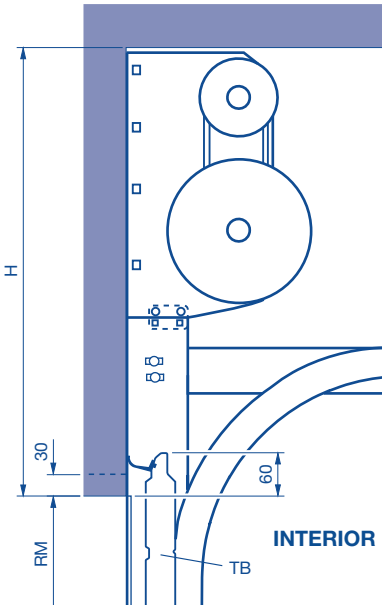

Single-skinned steel fascia for SPU F42 to make up for insufficient headroom up to 125 mm
(only for track applications N and L)

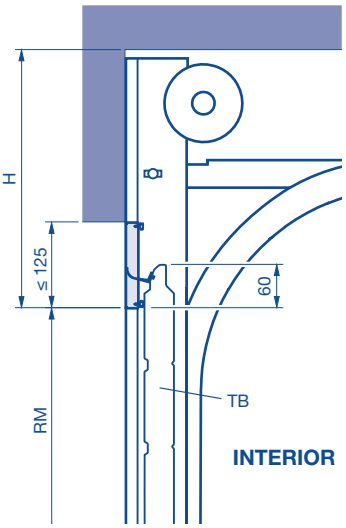

Smooth panel, anodised for APU F42, ALR F42, ALR F42 Glazing, ALR F42 Vitraplan to make up for insufficient headroom from 31 to 190 mm
(only for track applications N and L)

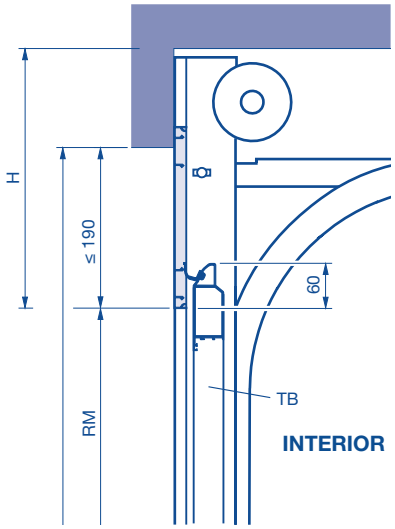

PU fascia panel to make up for insufficient headroom from 100 mm
Aluminium fascia profile to make up for insufficient headroom (see table)

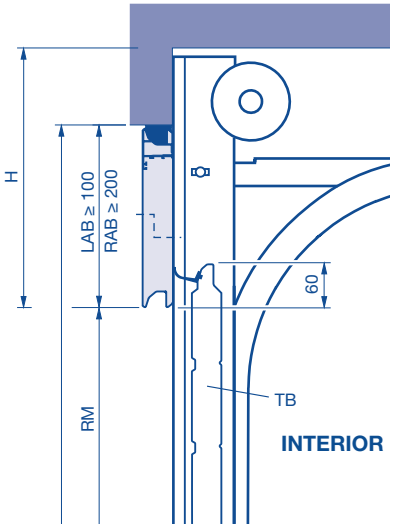

Lintel fitting with ThermoFrame

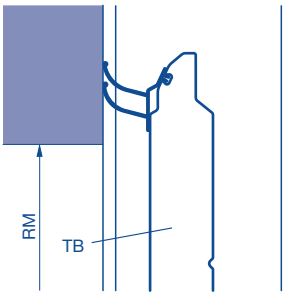

Aluminium frame fascia panel	
Height	**Infill type**
≥ 200	FU, LB, S, SE, XU, FK, KR
≥ 245	S2, S3, R2, C2, A2, A3, B2, B3, M2, M3
≥ 230 – 692	S2, S3, R2, C2, A2, A3, B2, B3, M2, M3 for APU F42 S-Line / ALR F42 S-Line

- Aluminium frame fascia panel with real glass infill VG, E2 and G2 on request.

H Min. headroom (see page 42)
RM Grid
TB Door leaf
LAB Fascia panel
RAB Frame fascia panel

Bottom Edge

Without wicket door / with wicket door and threshold rail	With wicket door with trip-free threshold

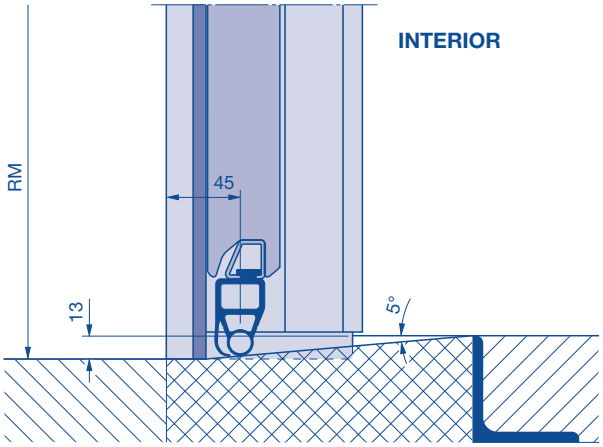

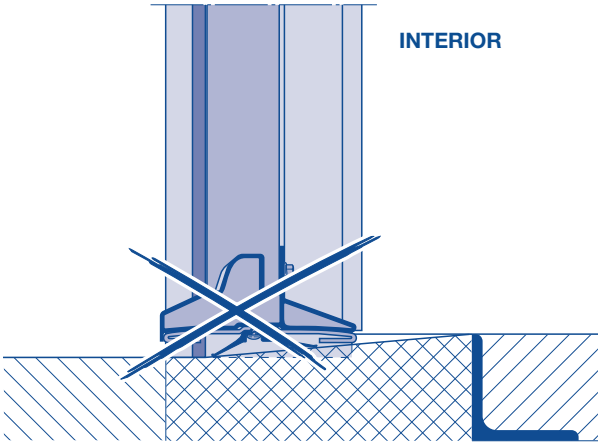

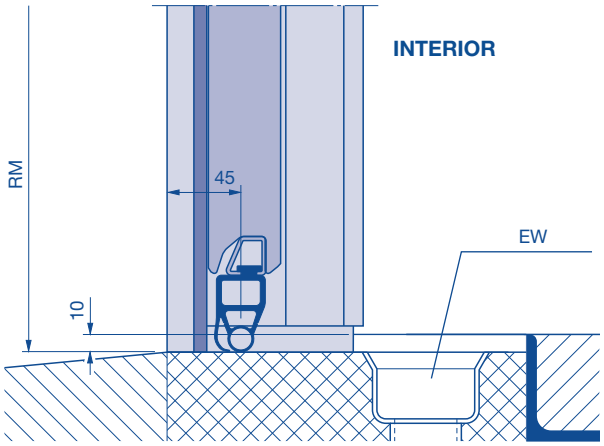

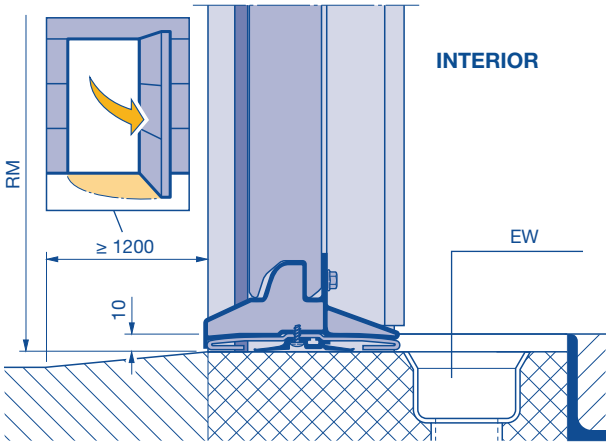

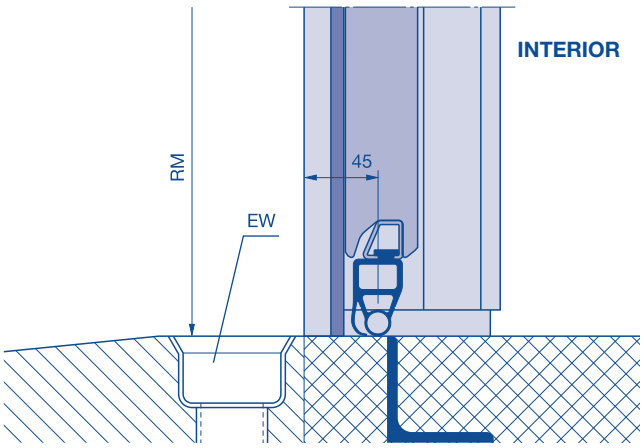

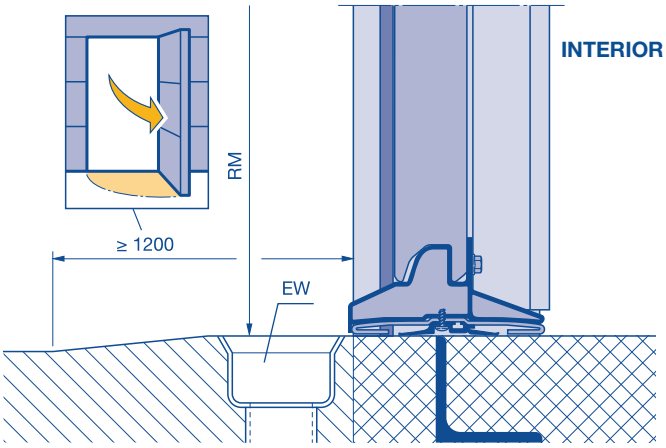

EW Drainage
RM Grid

Chain Hoist

Track applications N, NA, ND, NH, NS, GD, H, HA, HD, HG, HU, RD, RG, VU, WG

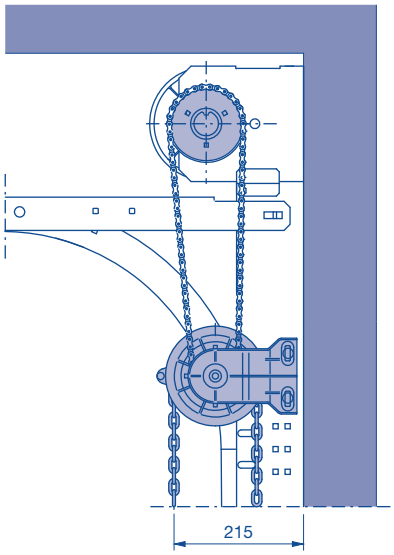

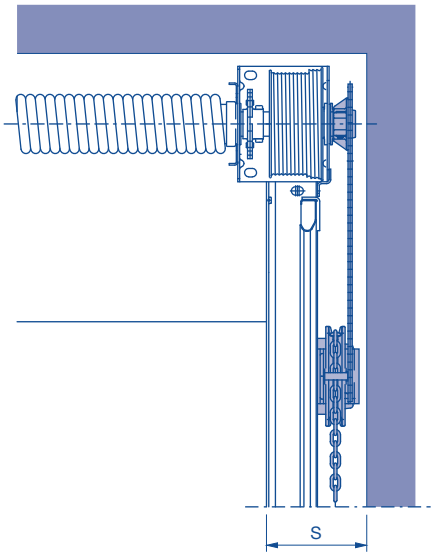

Track application	N	NA	ND	NH	NS	GD	H	HA	HD	HG	HU	RD	RG	VU	WG
S	165	165	165	165	165	165	185	185	185	185	185	185	185	165	165

Track applications L and LD

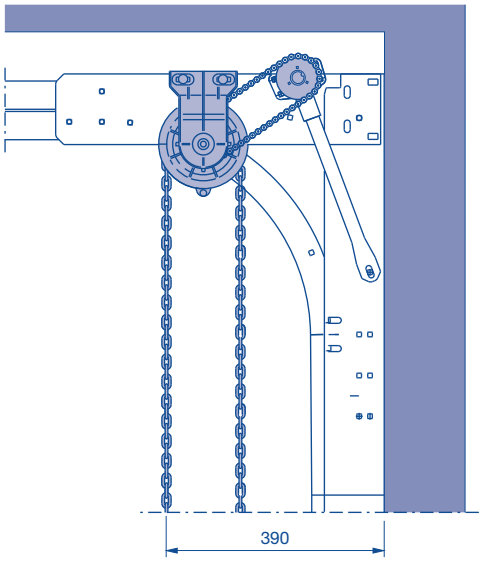

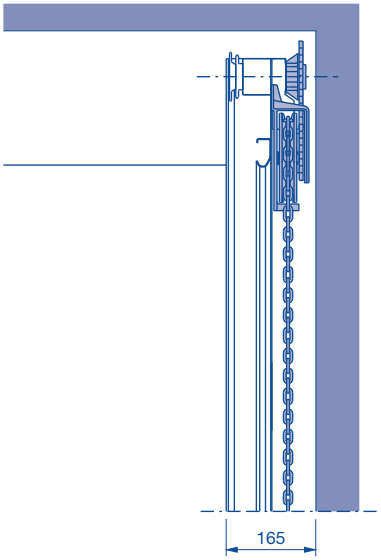

Hand Pulley

With rope or link steel chain

Track applications up to 20 m² door surface

With rope or link steel chain

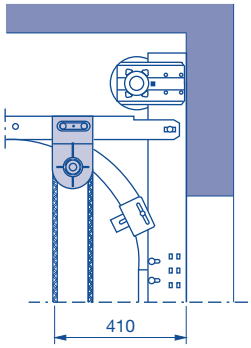

N, NA, ND, NH, NS, GD, H, HA, HD, HG, HU, RD, RG

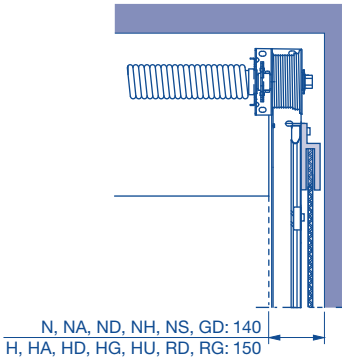

With rope or link steel chain

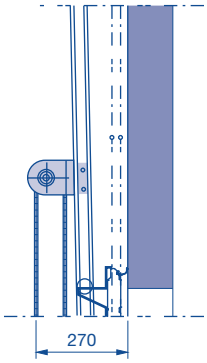

V, VA

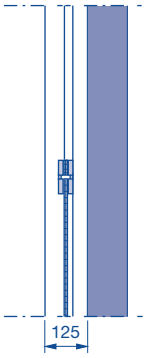

With rope or link steel chain

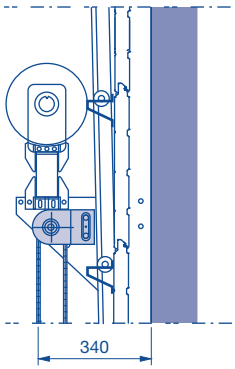

VU, WG

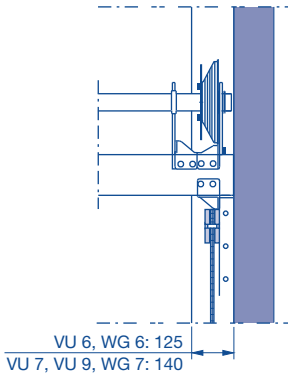

Ceiling Anchors

Track suspensions for all track applications except V, VA, VU and WG

Track suspensions as ceiling anchors in five lengths, standard length 469 mm.
DH = Rear ceiling anchor (see pages 42 – 56), door weights for roof loads (see pages 42 – 49).

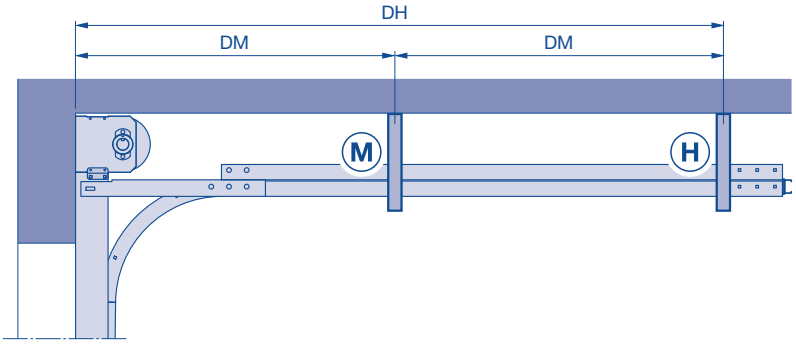

Double track (suspensions), Door heights RM ≤ 5000			
DH	M	H	DM
– 1555	–	1	–
1560 – 3720	1	1	DH/2
3730 – 5195	2	1	DH/3

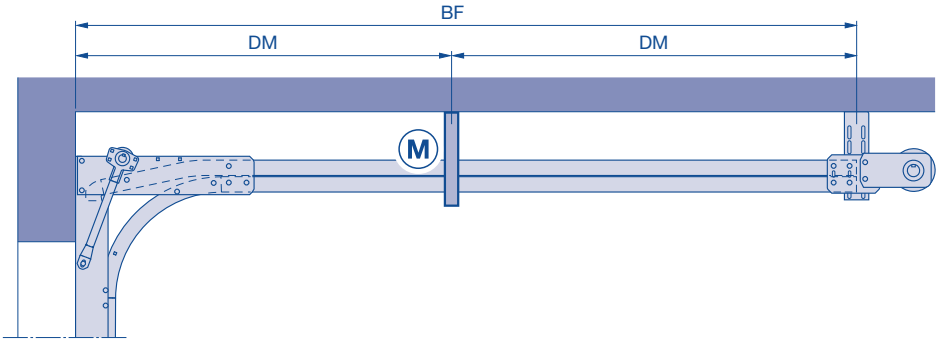

Double track (suspensions), L		
BF	M	DM
≤ 4182	1	BF/2
> 4182	2	BF/3

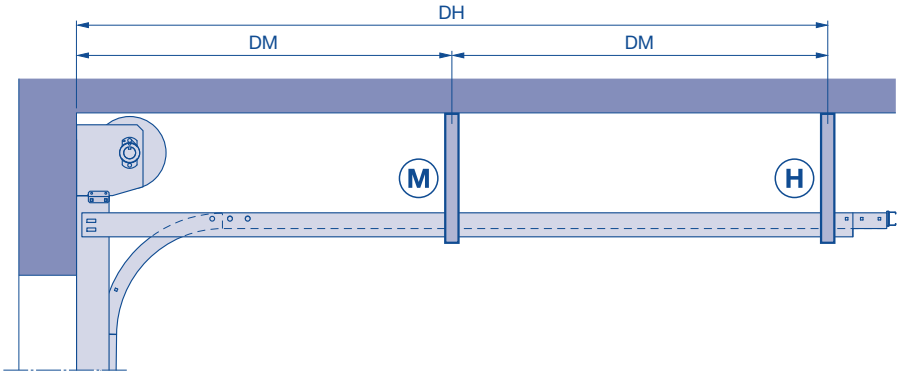

C-rail (suspensions) all track sizes, Door heights RM > 5000			
DH	M	H	DM
	1	1	DH/2

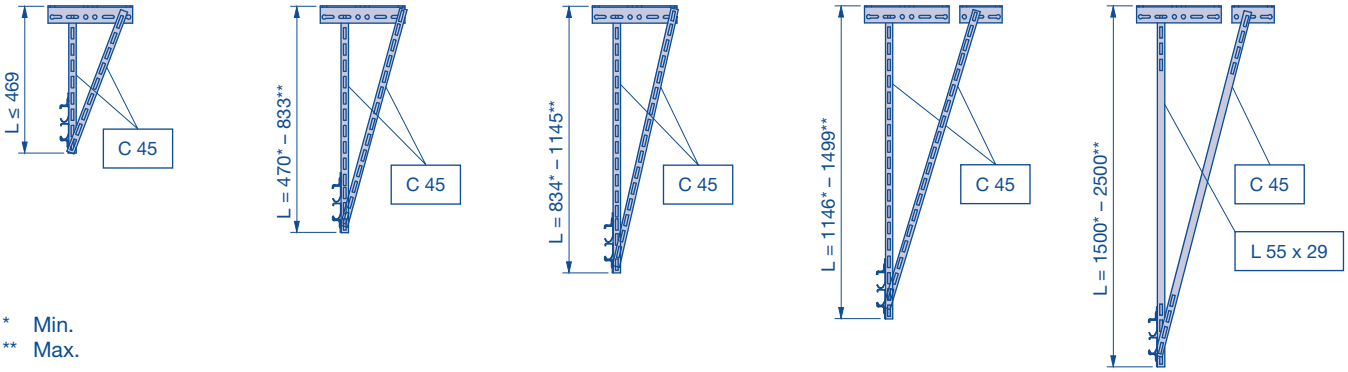

* Min.
** Max.

BF Position of spring shaft
DH Rear ceiling anchor
DM Centre ceiling anchor

Shaft Operator WA 300

Shaft operator WA 300 for track applications N, NA, H, HA, HG, V and VA

As shown in the figure, the operator can be fitted either left or right, viewed from the inside.

Fitting example ⑧ right

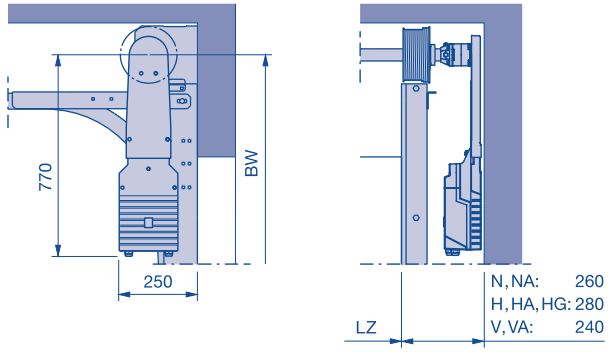

Fitting example ⑨ right

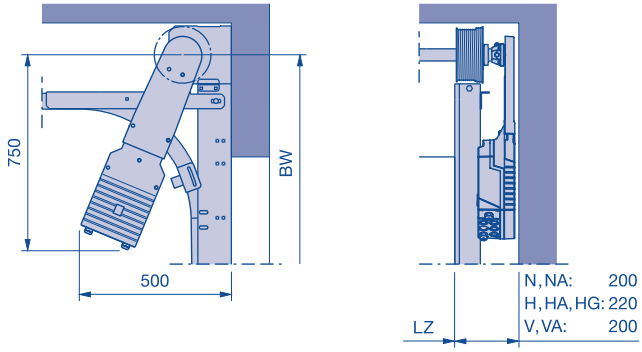

Shaft operator WA 300 for track application L

As shown in the figure, the operator can be fitted either left or right, viewed from the inside.
In fitting example 9: on the side opposite the door lock.

Fitting example ⑧ right

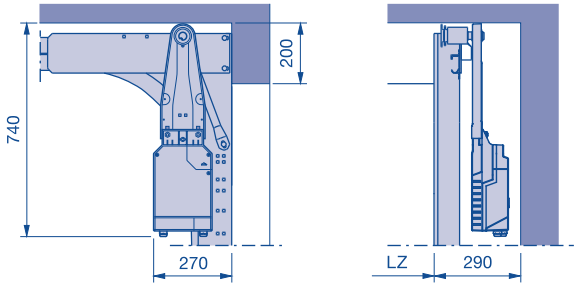

Fitting example ⑨ right

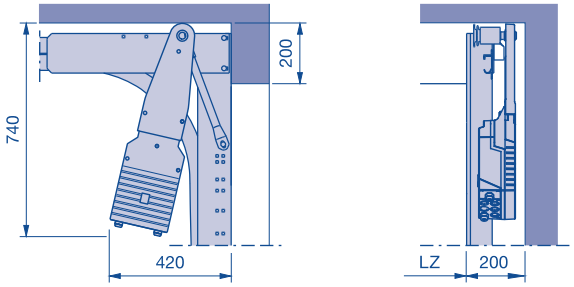

Shaft operator WA 300 for track applications HU, RG, VU and WG

As shown in the figure, the operator can be fitted either left or right, viewed from the inside.

Fitting example ⑧ right

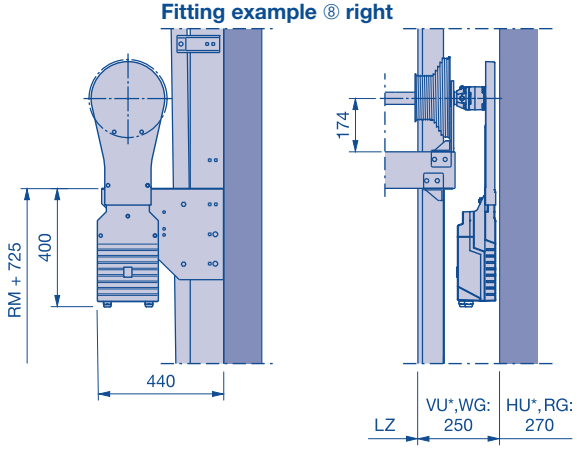

Fitting example ⑨ right

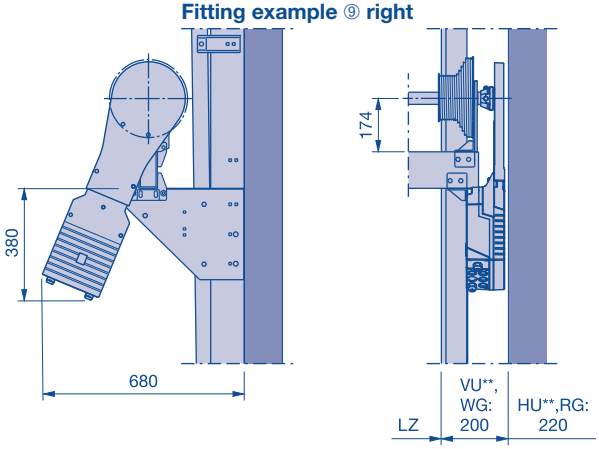

* In the door range LZ ≤ 3000 and RM ≤ 3500 a sideroom from 200 is possible

** In the door range LZ ≤ 3000 and RM ≤ 3500 the track applications VU and HU are not possible

LZ Clear frame dimensions

BW Position of shaft support

Shaft Operator WA 300

Shaft operator WA 300 for track applications N, NA and L

Without wicket door

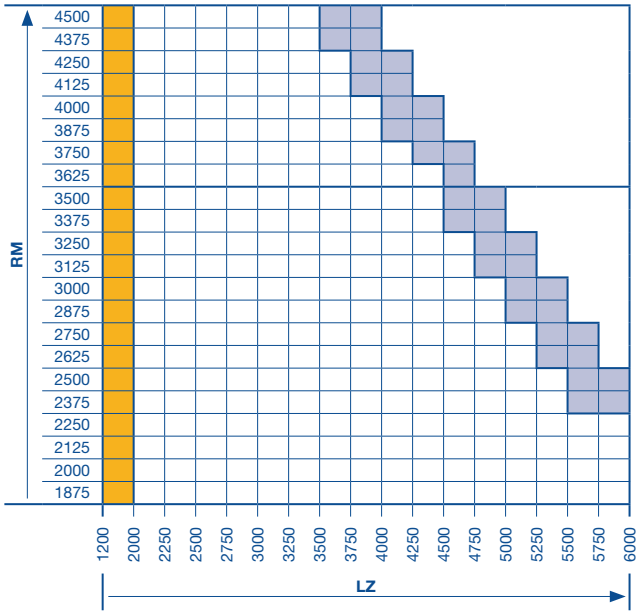

With wicket door

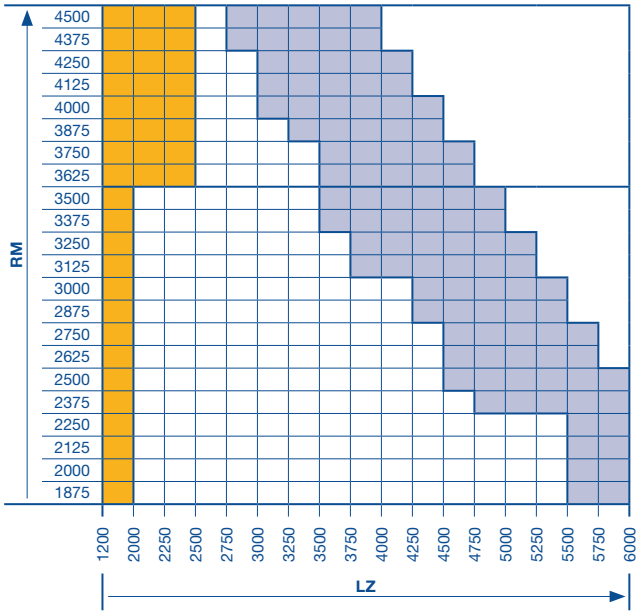

Shaft operator WA 300 for track applications H, HA, HG, HU, RG, V, VA, VU and WG

Without wicket door

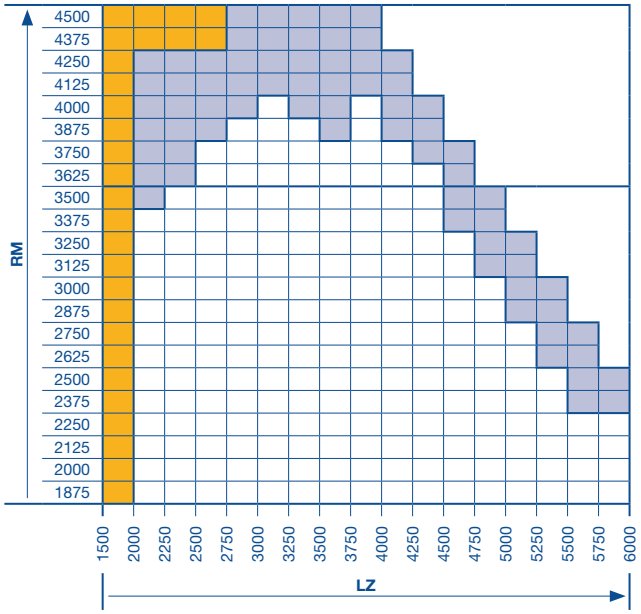

With wicket door

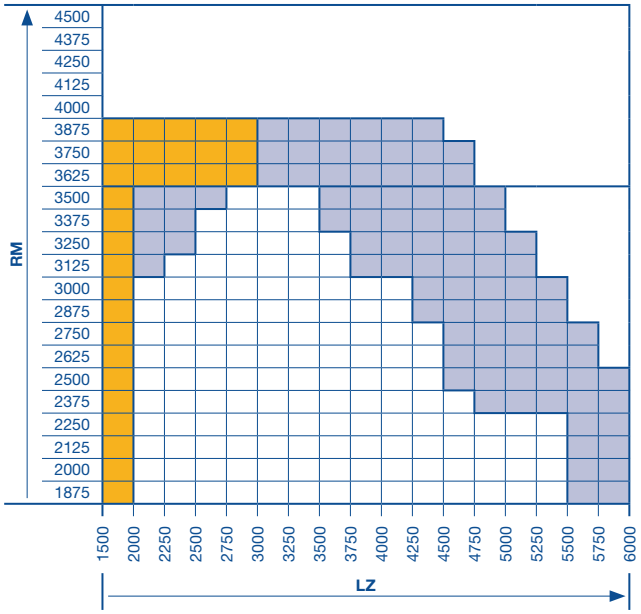

WA 300 possible.

WA 300 possible, versions with glazing S3, LB and P on request.

WA 300 on request.

LZ Clear frame dimensions
RM Grid height

Dimensions in mm

Shaft Operator WA 400

As a frame-mounted operator

Shaft operator WA 400 for all track applications, except for L, LD, HU, RD, RG, VU and WG

As shown in the figure, the operator can be fitted either left or right, viewed from the inside.

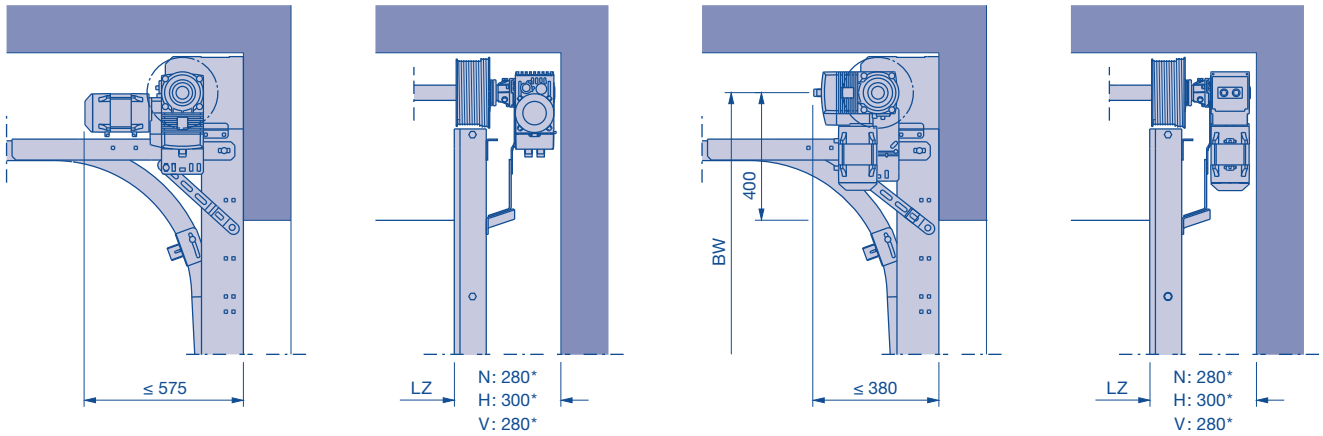

*** Note:**
Dimension + 75 mm if using a non-jointed emergency crank handle

Shaft operator WA 400 for track applications HU, RD, RG, VU and WG

As shown in the figure, the operator can be fitted either left or right, viewed from the inside.

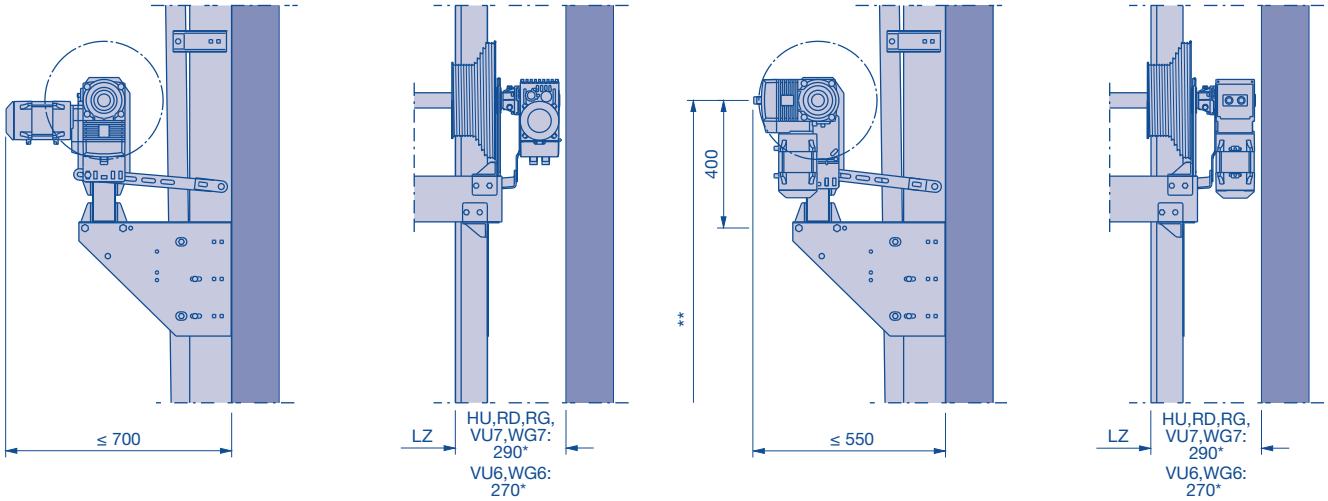

*** Note:**
Dimension + 75 mm if using a non-jointed emergency crank handle

** On request

LZ Clear frame dimensions
BW Position of shaft support

Shaft Operator WA 400

With chain box

Shaft operator WA 400 for all track applications, except for L, LD, HU, RD, RG, VU and WG

As shown in the figure, the operator can be fitted either left or right, viewed from the inside.
In fitting example 5: on the side opposite the door lock.

Fitting example ⑤ right

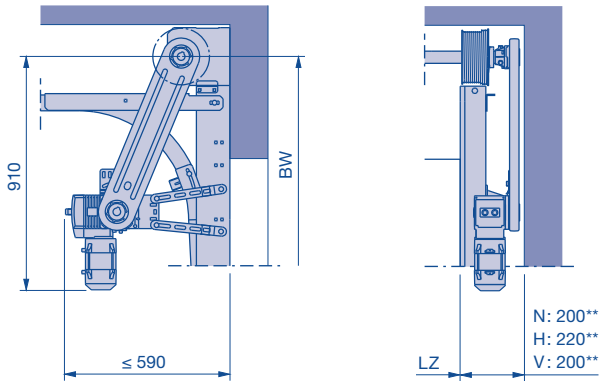

Fitting example ⑥ right

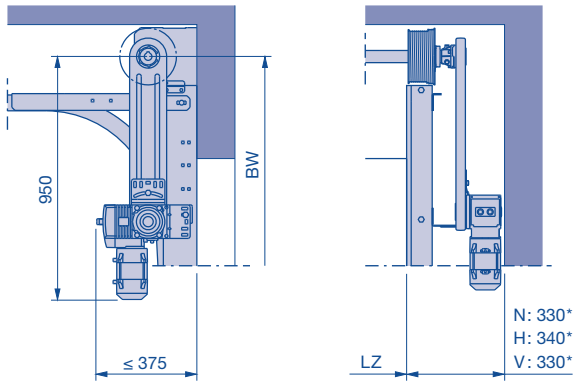

Shaft operator WA 400 for the track applications L and LD

As shown in the figure, the operator can be fitted either left or right, viewed from the inside.
In fitting example 5: on the side opposite the door lock.

Fitting example ⑤ right

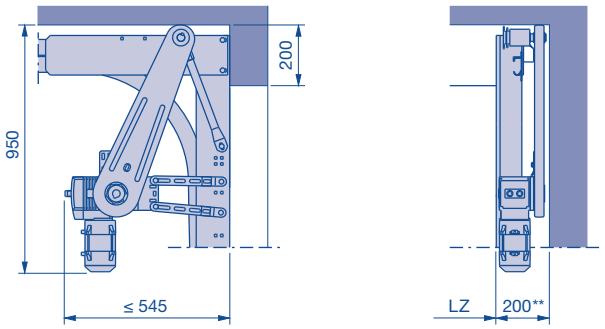

Fitting example ⑥ right

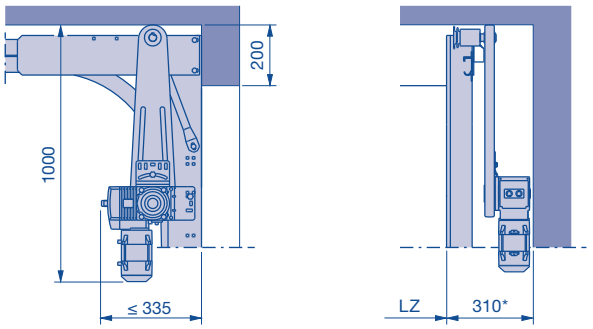

Shaft operator WA 400 for track applications HU, RD, RG, VU and WG

As shown in the figure, the operator can be fitted either left or right, viewed from the inside.
In fitting example 5: on the side opposite the door lock.

Fitting example ⑤ right

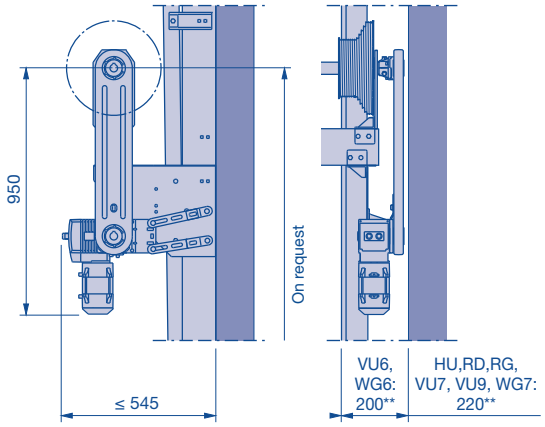

Fitting example ⑥ right

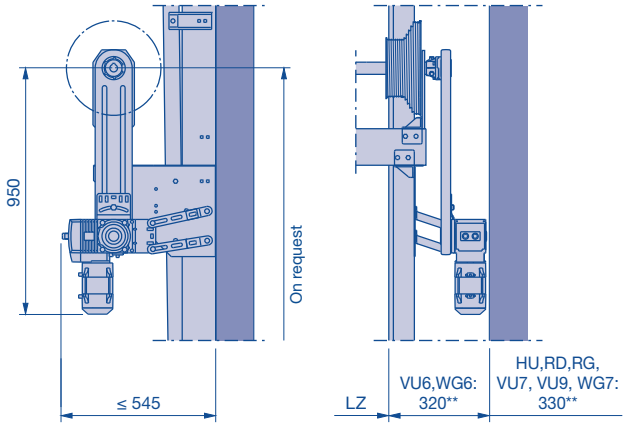

*** Note:**
Dimension + 75 mm if using a non-jointed emergency crank handle

LZ Clear frame dimensions

**** Note:**
Dimension + 40 mm if using a non-jointed emergency crank handle

BW Position of shaft support

Shaft Operator WA 400

For central mounting

Shaft operator WA 400 for track applications N and ND

Control A / B 445, 460

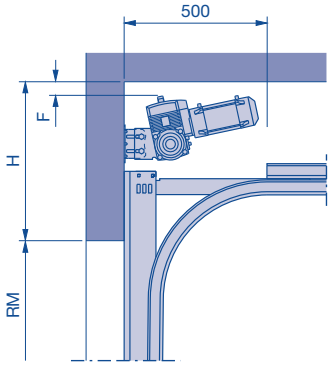

Track application	A / B 445, 460		B 460 FU	
	H min.	F min.	H min.	F min.
N 1	520	45	590	45
N 2	550	50	615	45
N 3	–	–	675	45
ND 1	520	65	550	48
ND 2	550	75	570	48
ND 3	–	–	650	48

Control B 460 FU

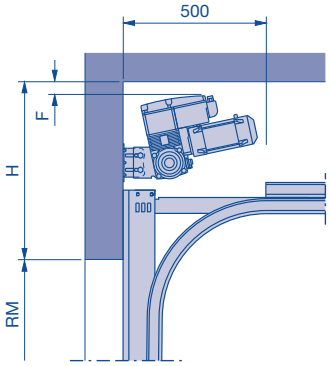

Shaft operator WA 400 for the track applications NH and GD

Control A / B 445, 460

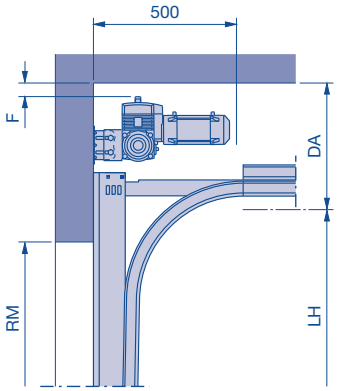

Track application	A / B 445, 460		B 460 FU	
	DA min.	F min.	DA min.	F min.
NH 1 / GD 1	415	50	480	45
NH 2 / GD 2	440	50	485	45
NH 3	–	–	565	45

Control B 460 FU

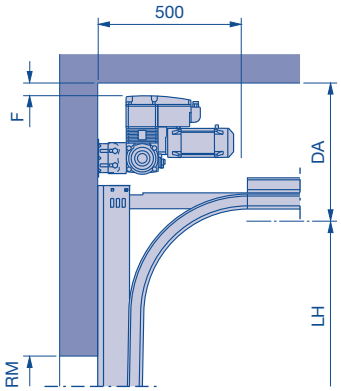

Shaft operator WA 400 for track application NS

Control A / B 445, 460

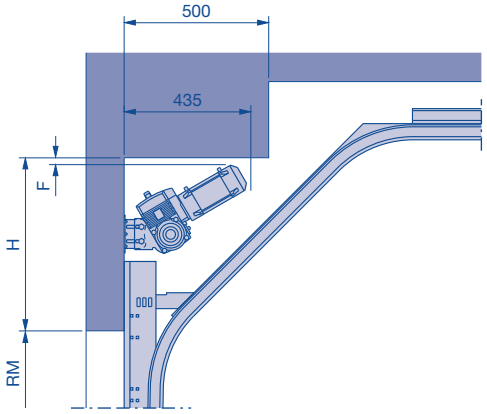

Control B 460 FU

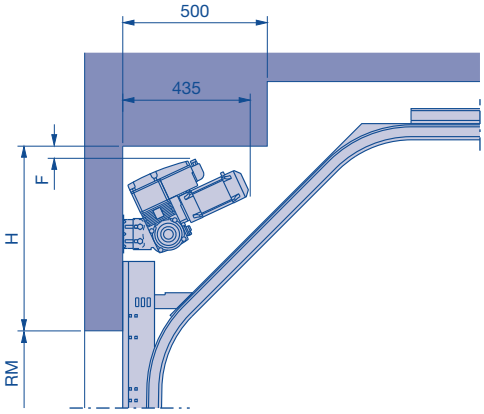

Track application	A / B 445, 460		B 460 FU	
	H min.	F min.	H min.	F min.
NS 1	570	20	615	45
NS 2	600	25	640	45

Note:
WA 400 as a centre motor in conjunction with double spring shaft on request!

H Headroom
RM Grid height
DA Distance to ceiling
LH Track height
F Clearance ceiling / shaft operator

Shaft Operator WA 400

For central mounting

Shaft operator WA 400 for track applications H, HG and HD

Control A / B 445, 460

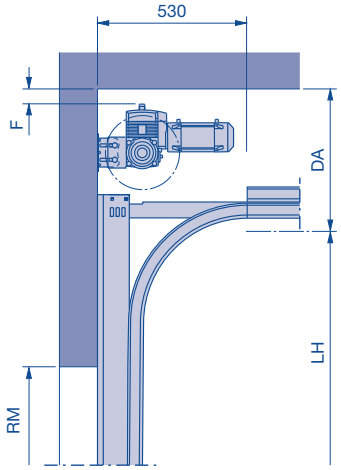

Track application	A / B 445, 460		B 460 FU	
	DA min.	F min.	DA min.	F min.
H 4, HG 4	500	55	540	45
H 5, HG 5	500	55	540	45
H 8	–	–	565	45
HD	On request			

Control B 460 FU

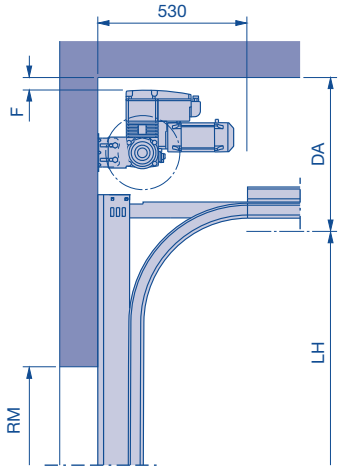

Shaft operator WA 400 for the track applications HU, RD and RG

Control A / B 445, 460

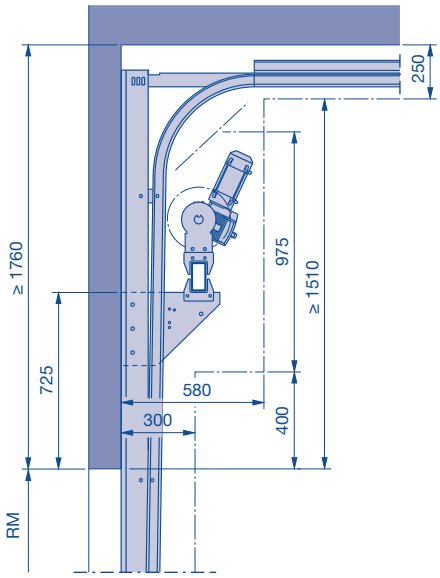

Control B 460 FU

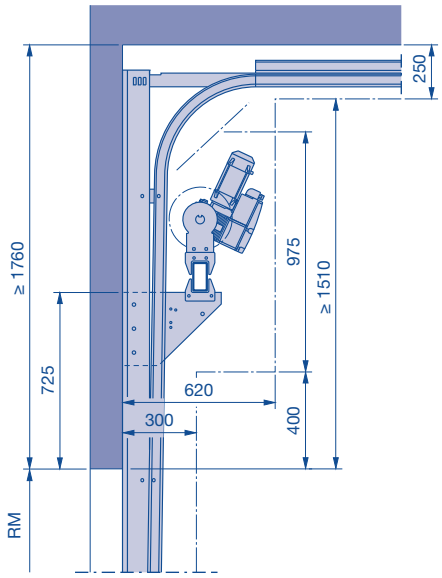

Note:
WA 400 as a centre motor in conjunction with double spring shaft on request!

RM	Grid height	**LH**	Track height
DA	Distance to ceiling	**F**	Clearance ceiling / shaft operator

Shaft Operator WA 400

For central mounting

Shaft operator WA 400 for track application V

Control A / B 445, 460

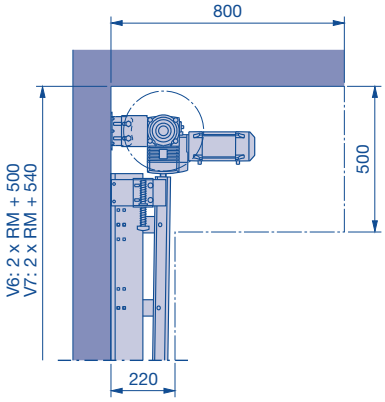

Control B 460 FU

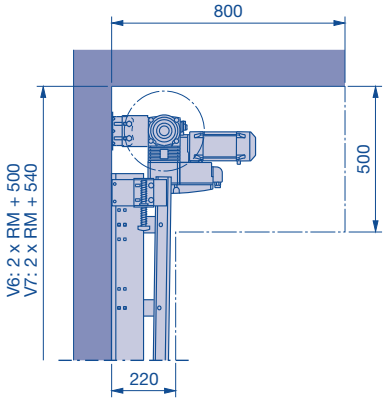

Shaft operator WA 400 for track applications VU and WG

Control A / B 445, 460

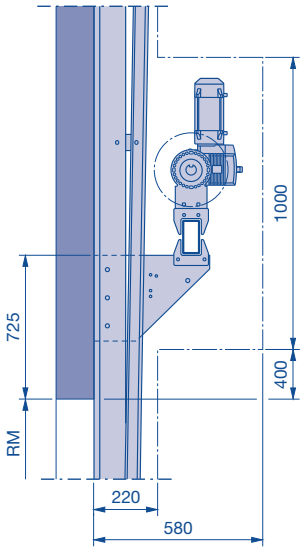

Control B 460 FU

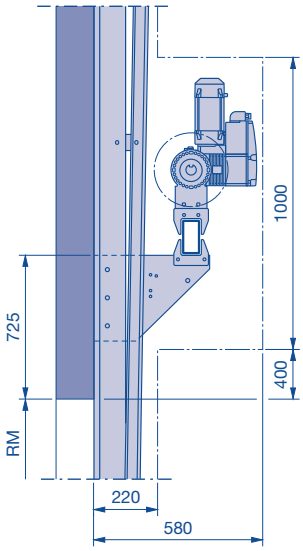

Note:
WA 400 as a centre motor in conjunction with double spring shaft on request!

RM Grid height
DA Distance to ceiling
LH Track height

Chain Drive Operator ITO 400

ITO 400 track applications N and ND (doors with wicket doors on request)

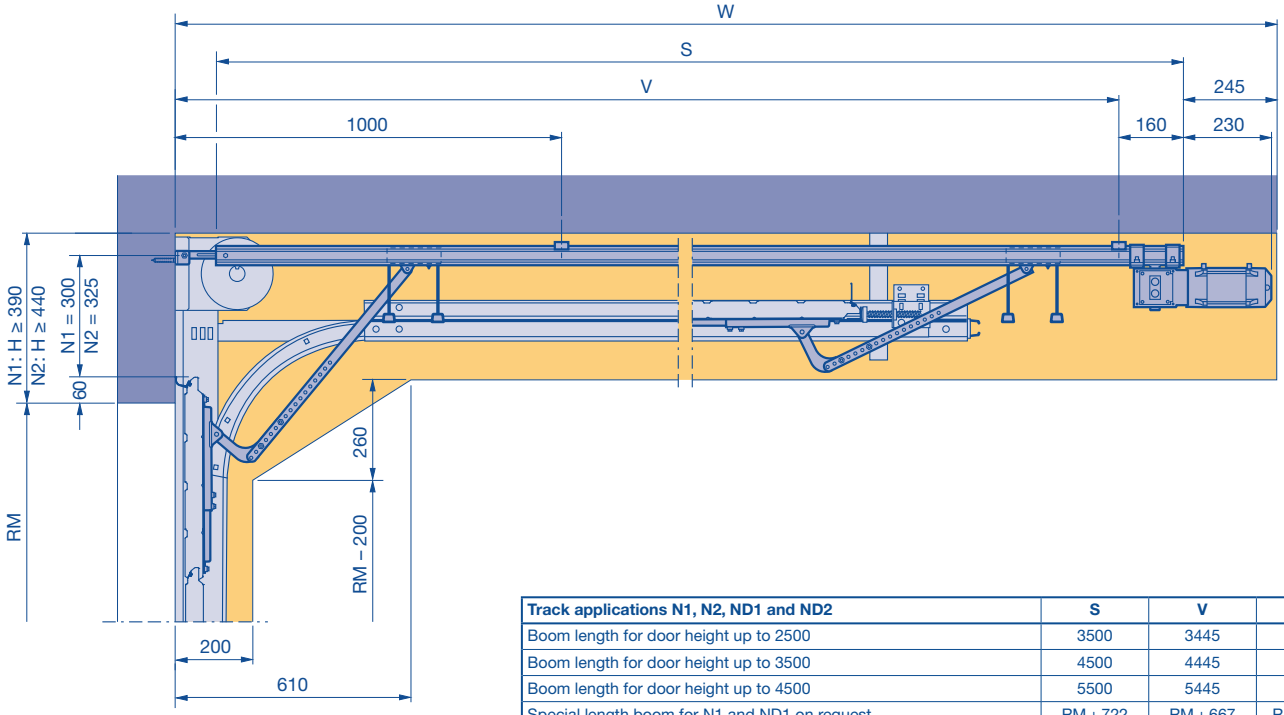

Track applications N1, N2, ND1 and ND2	S	V	W
Boom length for door height up to 2500	3500	3445	3850
Boom length for door height up to 3500	4500	4445	4850
Boom length for door height up to 4500	5500	5445	5850
Special length boom for N1 and ND1 on request	RM + 722	RM + 667	RM + 1072
Special length boom for N2 and ND2 on request	RM + 829	RM + 774	RM + 1179

ITO 400 track applications L and LD (doors with wicket doors on request)

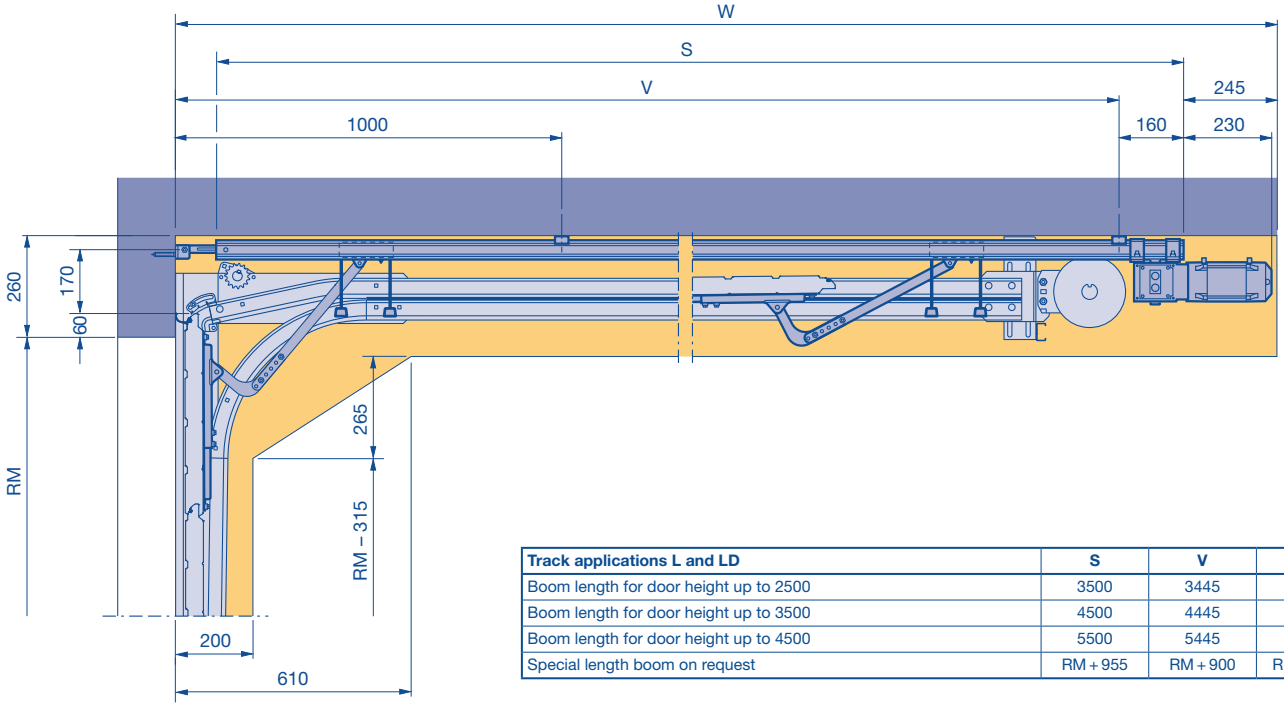

Track applications L and LD	S	V	W
Boom length for door height up to 2500	3500	3445	3850
Boom length for door height up to 3500	4500	4445	4850
Boom length for door height up to 4500	5500	5445	5850
Special length boom on request	RM + 955	RM + 900	RM + 1305

Operator SupraMatic H / HD

SupraMatic H track application N (doors with wicket doors, ALR F42 Glazing and doors with real glass infill on request)*

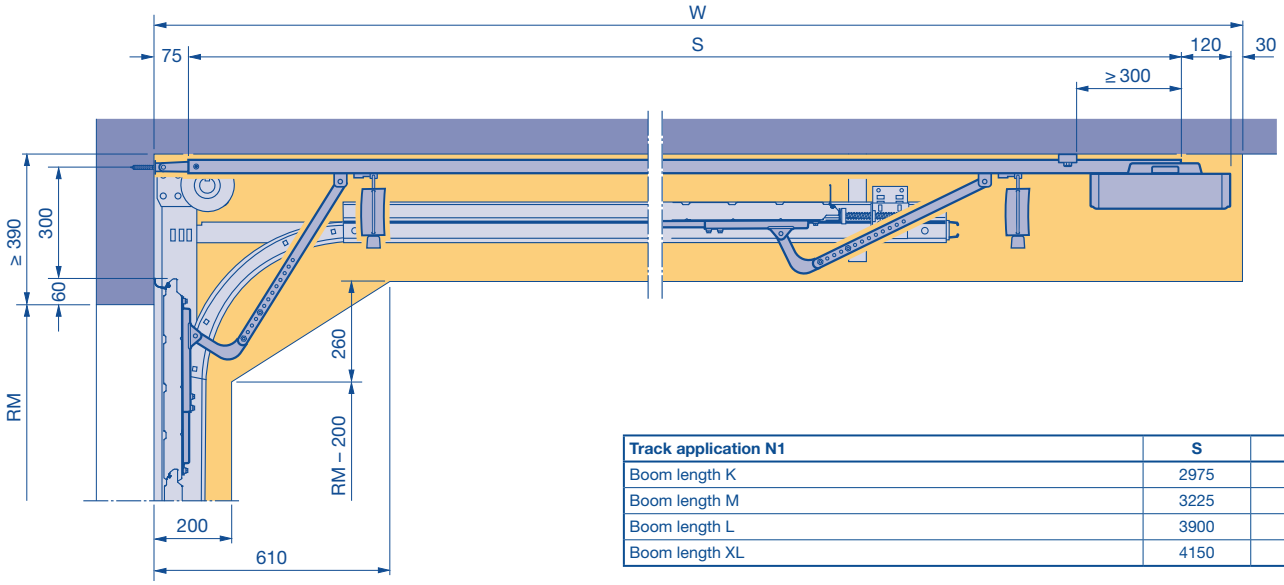

Track application N1	S	W
Boom length K	2975	3200
Boom length M	3225	3450
Boom length L	3900	4125
Boom length XL	4150	4375

SupraMatic H track application L (doors with wicket doors, ALR F42 Glazing and doors with real glass infill on request)*

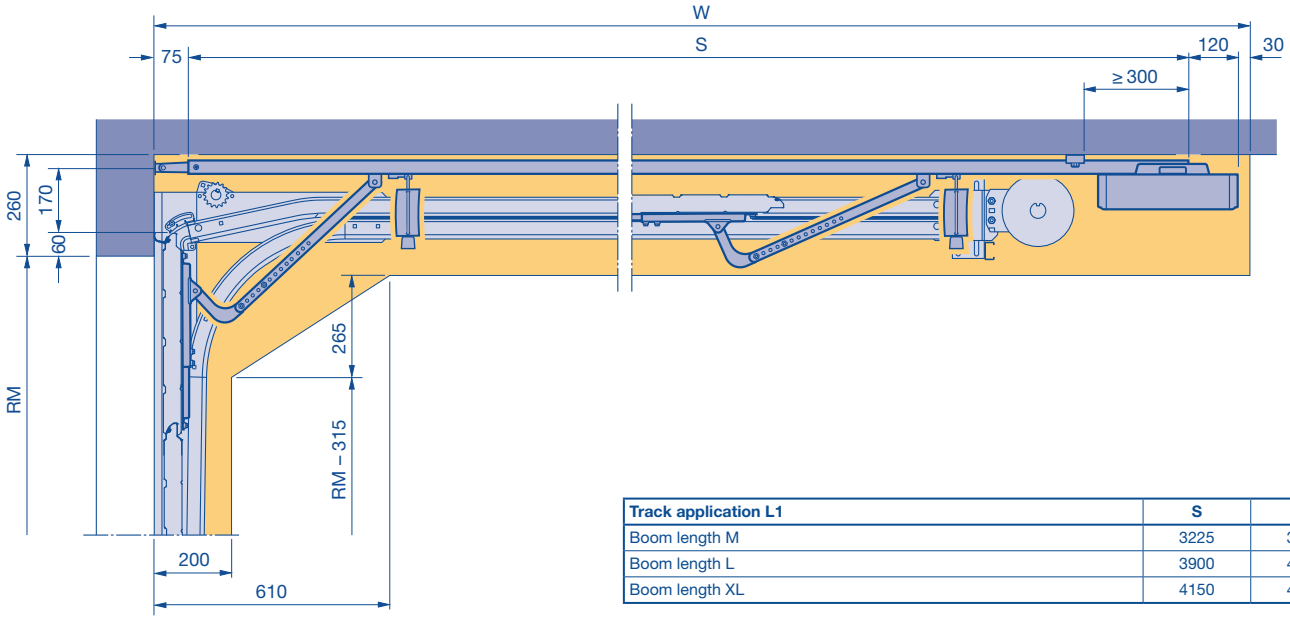

Track application L1	S	W
Boom length M	3225	3450
Boom length L	3900	4125
Boom length XL	4150	4375

(See the next page for the size range for SupraMatic H / HD)

*** Note:**
This operator is not possible with DPU doors!

RM Grid height

Operator SupraMatic H / HD

SupraMatic H size range

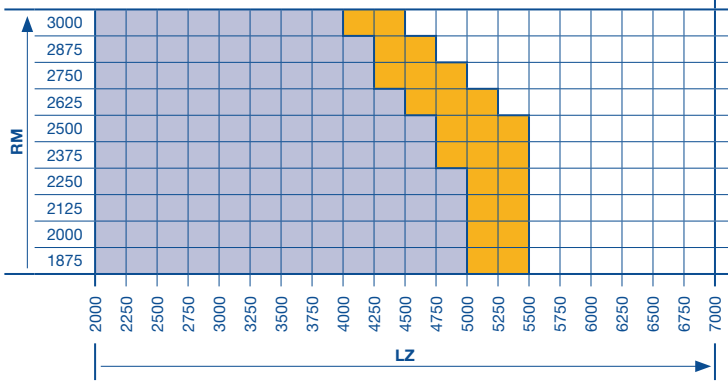

Boom length		No. of door sections			
Track application **N1**	Track application **L1**	375	500	625**	750**
L	XL	–	6	–	4
L	XL	1	5	1	3
L	L	2	4	2	2
L	L	3	3	3	1
L	L	–	5	4	–
M	L	1	4	4*	–
M	L	2	3	–	3
K	M	3	2	1	2
K	M	–	4	2	1
K	M	1	3	3	–

SupraMatic H not possible.

SupraMatic H possible.

SupraMatic H on request.

SupraMatic HD size range

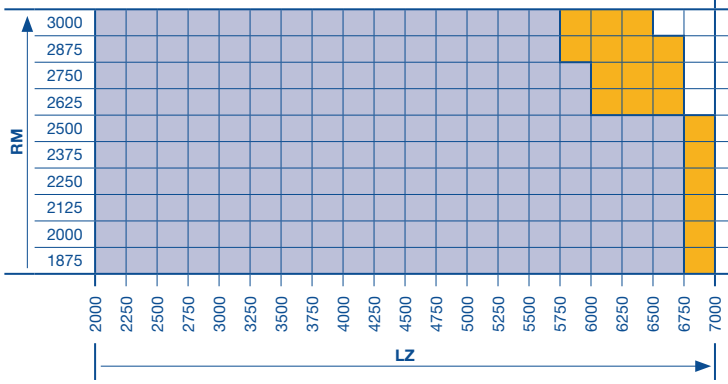

Boom length		No. of door sections			
Track application **N1**	Track application **L1**	375	500	625**	750**
L	XL	–	6	–	4
L	XL	1	5	1	3
L	L	2	4	2	2
L	L	3	3	3	1
L	L	–	5	4	–
M	L	1	4	4*	–
M	L	2	3	–	3
K	M	3	2	1	2
K	M	–	4	2	1
K	M	1	3	3	–

SupraMatic HD not possible.

SupraMatic HD possible.

SupraMatic HD on request.

LZ Clear frame dimensions
RM Grid height
* Top door section shortened to 500 mm
** Only without wicket door

Dimensions in mm

Door Leaf Speeds

Door leaf speeds WA 300 / WA 400

(ATTENTION! The stated speeds can **only be achieved under optimum conditions** regarding door size and track size. More detailed information on request, as it is dependent on door heights and track heights.)

	WA 300 S4			WA 400							
	Integrated / external control 360			Control A / B 445 and 460				Control B 460 FU		Without twin roller	With twin roller
Track application	Chain box operator [1]	Max. speed in mm/s, open / close [5]	Max. speed in mm/s, open / close [6]	Frame-mounted operator rpm	Max. speed in mm/s, open / close	Chain box operator rpm	Max. speed in mm/s, open / close	Frame-mounted operator [1]	Chain box operator [1]	Max. speed n mm/s, open / close	Max. speed in mm/s, open / close
N1	yes	190	95	30	190	30	190	yes	yes	300 / 200	300 / 200
N 2	yes	210	105	24	210	24	210	yes	yes	300 / 200	470 / 200
N 3	–	–	–	–	–	16	190	yes	yes	300 / 200	540 / 200
NA1	yes	190	95	30	190	30	190	yes	yes	300 / 200	300 / 200
NA2	yes	210	105	24	210	24	210	yes	yes	300 / 200	470 / 200
ND1	–	–	–	30	190	30	190	yes	yes	300 / 200	300 / 200
ND2	–	–	–	24	210	24	210	yes	yes	300 / 200	470 / 200
ND3	–	–	–	–	–	16	190	yes	yes	300 / 200	540 / 200
NH1	–	–	–	30	190	30	190	yes	yes	300 / 200	300 / 200
NH2	–	–	–	24	210	24	210	yes	yes	300 / 200	470 / 200
NH3	–	–	–	–	–	16	190	yes	yes	300 / 200	540 / 200
NS1	–	–	–	30	190	30	190	yes	yes	300 / 200	300 / 200
NS2	–	–	–	24	210	24	210	yes	yes	300 / 200	470 / 200
GD1	–	–	–	30	190	30	190	yes	yes	300 / 200	300 / 200
GD2	–	–	–	24	210	24	210	yes	yes	300 / 200	470 / 200
I1	yes	210	105	–	–	24	150	–	yes	300 / 200	300 / 200
I2	yes	210	105	–	–	24	150	–	yes	300 / 200	300 / 200
LD1	–	–	–	–	–	24	150	–	yes	300 / 200	300 / 200
LD2	–	–	–	–	–	24	150	–	yes	300 / 200	300 / 200
H4	yes	160 / 190 [4]	80 / 95 [4]	24 / 19 [1]	190	24 / 19 [1]	190	yes	yes	300 / 200	400 / 200
H5	yes	210	105	19 / 16 [1]	210	19 / 16 [1]	210	yes	yes	300 / 200	520 / 200
H 8	–	–	–	–	–	16 [2]	250 [2]	yes	yes	300 / 200	540 / 200
HA4	yes	160 / 190 [4]	80 / 95 [4]	24 / 19 [1]	190	24 / 19 [1]	190	yes	yes	300 / 200	400 / 200
HA5	yes	210	105	19 / 16 [1]	210	19 / 16 [1]	210	yes	yes	300 / 200	520 / 200
HD4	–	–	–	24 / 19 [1]	190	24 / 19 [1]	190	yes	yes	300 / 200	400 / 200
HD5	–	–	–	19 / 16 [1]	210	19 / 16 [1]	210	yes	yes	300 / 200	520 / 200
HD8	–	–	–	–	–	16 [2]	250 [2]	yes	yes	300 / 200	540 / 200
HG4	yes	160 / 190 [4]	80 / 95 [4]	24 / 19 [1]	190	24 / 19 [1]	190	yes	yes	300 / 200	400 / 200
HG5	yes	210	105	19 / 16 [1]	210	19 / 16 [1]	210	yes	yes	300 / 200	520 / 200
HU4	yes	160 / 190 [4]	80 / 95 [4]	24 / 19 [1]	190	24 / 19 [1]	190	yes	yes	300 / 200	400 / 200
HU5	yes	210	105	19 / 16 [1]	210	19 / 16 [1]	210	yes	yes	300 / 200	520 / 200
RD4	–	–	–	24 / 19 [1]	190	24 / 19 [1]	190	yes	yes	300 / 200	400 / 200
RD5	–	–	–	19 / 16 [1]	210	19 / 16 [1]	210	yes	yes	300 / 200	520 / 200
RG4	yes	160 / 190 [4]	80 / 95 [4]	24 / 19 [1]	190	24 / 19 [1]	190	yes	yes	300 / 200	400 / 200
RG5	yes	210	105	19 / 16 [1]	210	19 / 16 [1]	210	yes	yes	300 / 200	520 / 200
V6	yes	160 / 190 [4]	80 / 95 [4]	19	190	19	190	yes	yes	440 / 200 [3]	
V7	yes	190	95	16	190	16	190	yes	yes	440 / 200 [3]	
V9	–	–	–	–	–	16 [2]	250	yes	yes	440 / 200 [3]	
VA6	yes	160 / 190 [4]	80 / 95 [4]	19	190	19	190	yes	yes	440 / 200 [3]	
VU6	yes	160 / 190 [4]	80 / 95 [4]	19	190	19	190	yes	yes	440 / 200 [3]	
VU7	yes	190	95	16	190	16	190	yes	yes	440 / 200 [3]	
VU9	–	–	–	–	–	16 [2]	250	yes	yes	440 / 200 [3]	
WG6	yes	160 / 190 [4]	80 / 95 [4]	19	190	19	190	yes	yes	440 / 200 [3]	
WG7	yes	190	95	16	190	16	190	yes	yes	440 / 200 [3]	

[1] Speed corresponding to high-lift / door height (RM)
[2] For impulse controls, the leading photocell VL 1/2 is required!
[3] Twin rollers not necessary with track applications V and VU!
[4] Max speed depending on the door size, not applicable for doors with wicket doors
[5] With closing edge safety device (optosensors, VL 1 or VL 2)
[6] From 2500 mm (above FFL) to FFL without closing edge safety device to comply with EN 13241-1

Note
Double spring shaft only possible in conjunction with control B 460 FU!

Infill Overview

Infill Overview	SPU F42	APU F42 S-Line	APU F42	APU F42 Thermo	ALR F42 S-Line	ALR F42	ALR F42 Thermo	ALR F42 Vitraplan	ALR F42 Glazing
Infill type	**Abbreviation**								
Clear synthetic pane, 3 mm [1] [3]	FK	–	FK	–	–	FK	–	–	–
Crystal structure synthetic pane, 3 mm [1] [3]	KR	–	KR	–	–	KR	–	–	–
Clear polycarbonate pane, 6 mm [3]	P	–	P	–	–	P	–	–	–
Multiple moulded pane, (7-fold), 16 mm, U_g= 1.9 W/(m²·K) [3]	S	–	S	S	–	S	S	–	–
PU insulation, 26 mm with Stucco-textured aluminium sheet cover on both sides	–	–	–	–	FU	FU	FU	–	–
PU insulation, 26 mm with smooth, anodised aluminium sheet cover on both sides	–	–	–	–	XU	XU	XU	–	–
Clear synthetic double pane, 26 mm, U_g = 2.6 W/(m²·K)	S2	S2	S2	S2	S2	S2	S2	S2	–
Synthetic double pane, crystal structure, 26 mm, U_g = 2.6 W/(m²·K)	R2	R2	R2	R2	R2	R2	R2	R2	–
Synthetic double pane, grey tinted, 26 mm, U_g = 2.6 W/(m² K)	A2	A2	A2	A2	A2	A2	A2	–	–
Synthetic double pane, brown tinted, 26 mm, U_g = 2.6 W/(m² K)	B2	B2	B2	B2	B2	B2	B2	–	–
Synthetic double pane, white tinted (opal), 26 mm, U_g = 2.6 W/(m² K)	M2	M2	M2	M2	M2	M2	M2	–	–
Clear synthetic triple pane, 26 mm, U_g = 1.9 W/(m²·K)	S3	S3	S3	S3	S3	S3	S3	S3	–
Synthetic triple pane, grey tinted, 26 mm, U_g = 1.9 W/(m²·K)	A3	A3	A3	A3	A3	A3	A3	–	–
Synthetic triple pane, brown tinted, 26 mm, U_g = 1.9 W/(m²·K)	B3	B3	B3	B3	B3	B3	B3	–	–
Synthetic triple pane, white tinted (opal), 26 mm, U_g = 1.9 W/(m²·K)	M3	M3	M3	M3	M3	M3	M3	–	–
Clear polycarbonate double pane, 26 mm, U_g = 2.6 W/(m²·K)	C2	C2	C2	C2	C2	C2	C2	C2	–
Single pane of laminated safety glass, 6 mm [2] [3]	VG	–	VG	–	–	VG	–	–	VG
Double pane made of single-pane safety glass, 26 mm, U_g = 2.7 W/(m²·K) [2]	E2	–	E2	E2	–	E2	E2	–	E2
Climatic double pane made of single-pane safety glass, 26 mm, U_g = 1.1 W/(m²·K) [2]	G2	–	G2	G2	–	G2	G2	–	G2
Stainless steel expanded mesh [1] [3] [4]	SE	–	SE	–	–	SE	–	–	–
Perforated stainless steel sheet, perforation 8 mm [1] [3] [4]	LB	–	LB	–	–	LB	–	–	–
Prepared for on-site infill [5]	BS	BS	BS	BS	BS	BS	BS	–	–

[1] **Note:** max. field width 1230 mm, if required add an additional field

[2] Only for door width up to 6000 mm, on request, and not in conjunction with wicket door

[3] Not possible for aluminium frames in Thermo version

[4] No colour coating possible

[5] On request; infill weight and thickness must be specified