# Industrial Rol·a·Door®

## Gliderol Continuous Sheet Curtain Roller Door

**Unprecedented in Construction and Design** In terms of technical excellence and superior design, the Gliderol Industrial Rol·a·Door® is unsurpassed in the manufacturing industry. The Gliderol Roller Door will undoubtedly add style and character to any building; the Industrial Rol·a·Door® can be made to suit most commercial/industrial openings, and is designed to provide reliable service for years to come.

**Leading the way in technology world wide** Gliderol Garage and Industrial Doors is a wholly owned UK based manufacturing company. The Gliderol Industrial Rol·a·Door® through years of research and development has evolved into a product demanding world wide attention. Computer assisted technology has enabled Gliderol to develop its manufacturing processes to produce an award winning industrial door that is cost effective, strong, hard-wearing, and safe.

**Quality, Security and Safety that can be relied on** The Gliderol Industrial Rol·a·Door® will provide you with strength and safety as a priority at all times. The strength gained from the unique broadline profile and aluminium bottom rail is unrivalled.

A Gliderol Roller Door will always remain a very safe garage door for you to operate throughout its life-span. The unique spring assisted spindle assembly will enable the Roller Door to always open and close easily, providing reliable performance at all times.

Manufactured by
**Gliderol Garage & Industrial Doors**

APRIL 2011

*Opening doors around the world®*

# Gliderol Industrial Rol·a·Door®

## Gliderol Continuous Sheet Curtain Roller Door

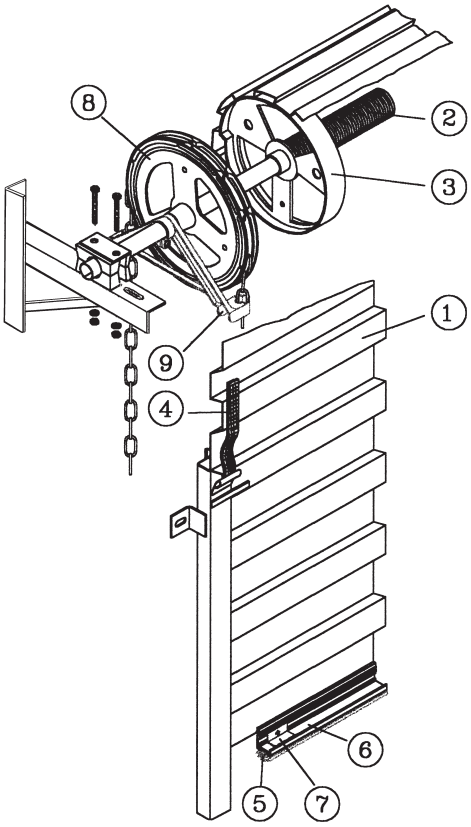


**Features**

**(1) Roller Door Curtain** Gliderol rollformed **PLASTISOL®** and **ZINCALUME®** sheet panels. Weather resistant and durable, able to withstand the harshest of conditions. The curtain provides industrial strength and quality in design to enhance overall appearance of the Roller Door.

**(2) Spring Assistance** The Gliderol Roller Door with its spring assisted mechanism offers precise balance enabling the user efficient easy operation. A fine balance between the weight of the curtain and the upward pull of the springs is maintained regardless of the position of your door.

**(3) Drum Wheel** Gliderol was the first to employ the use of engineering plastics in the manufacture of the drum wheel. This nylon drum wheel has been developed over time into a hard-wearing high performance component.

**(4) Polyglide™** Revolutionary new material developed by Gliderol Doors specifically for Roller Door operation. Allows effortless operation, with minimum noise and friction. Polyglide™ was tested for 22,000 cycles continuous use, the equivalent of more than 21 years service, based on three cycles a day.

**(5) Weatherseal** Durable weatherseal prevents any undesirable material entering your building from the outside when the Gliderol Roller Door is closed.

**(6) Bottom Rail** Aluminium in construction, this bottom rail has specifically been designed to reinforce your Roller Door against intruder penetration. Lockseamed to the Roller Door curtain, the bottom rail will provide sustained security and strength.

**(7) Door Stop/Roller** Designed specially to reduce friction and to assist in ease of operation when opening and closing your Gliderol Roller Door.

**(8) Direct Chain Wheel** Constructed of glass reinforced nylon, the direct chain wheel provides the user with smooth, efficient lifting assistance.

**(9) Chain Guide** Prevents the chain from slipping or releasing from chain wheel, ensures the safety is maintained at all times.

**(*) External Shoot Bolt** Practical locking mechanism enabling you to secure the Roller Door with padlocks from outside. Can be mounted at any height to suit individual preferences.

**(*) Optional Windlocking** Secure your Gliderol Roller Door against prevailing winds. Windlock Clips fixed to the Roller Door curtain secure the door in the guide. (*Cyclone rated. Certified AS1170-2).

**(*) Optional Planetary Gearing** assisted lifting mechanism, purposefully designed to enable safe, easy lifting operation of very large doors. Standard on any manual Industrial Rol·a·Door® covering an opening of greater than 10.5 square metres.

*Right:*
**Industrial Rol·a·Door® perfect for multiple storage facilities.**

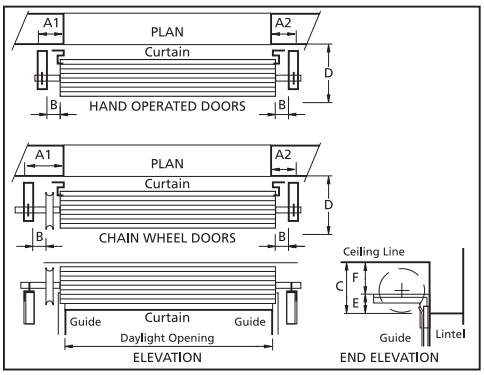


| DIMENSION PANEL (Minimum sizes) mm | | | | | | | |
|---|---|---|---|---|---|---|---|
| SERIES B INDUSTRIAL | Side Room A1 | Side Room A2 | B | Head Room C | D | E | F |
| Hand Operated Up to 2400 high | 150 | 125 | 50-100 | 460 | 540 | 190 | 270 |
| Up to 5000 high | 150 | 125 | 50-100 | 490 | 560 | 205 | 285 |
| Chain Operated Up to 2400 high | 225 | 125 | 50-100 | 460 | 540 | 190 | 270 |
| Up to 3000 high | 225 | 125 | 50-100 | 490 | 560 | 205 | 285 |
| Over 3000 high | 225 | 125 | 50-100 | 530 | 580 | 230 | 300 |
| STANDARD CURTAIN WIDTHS | | | | | | | |
| 1930, 2235, 2540, 2850, 3150, 3450, 3760, 4370, 5000 | | | | | | | |
| CURTAIN WIDTH | | | | | | | |
| DAYLIGHT OPENING PLUS 100mm | | | | | | | |

**PLASTISOL® Colours** Your Gliderol Industrial Rol·a·Door® is available in our unique colour range. The Gliderol Industrial Door is also available in plain **ZINCALUME®** if you desire. Colour samples are readily available at your nearest Gliderol agent.

**Gliderol Guarantee** All new Gliderol Roller Doors come with the 7yr/12month Gliderol guarantee, whereby you receive 7 years on the steel curtain (finish only) and one year on all finished material, parts and workmanship. Complete warranty details will be clearly outlined at point of sale.

GLIDEROL®
GARAGE DOORS

# Glidermatic® IGDU
## Industrial Door Operator

The fully patented IGDU commercial door operator is available exclusively through Gliderol UK Ltd and accredited dealers.

The IGDU is Gliderol's premium operator designed for industrial B series doors and light weight roller shutters.

This uniquely engineered operator includes the patented planetary gearing system enabling increased efficiency and increases the motor life of the unit. The drive unit may be factory fitted to the door or retro fitted to an existing door making it one of the most versatile operators on the market.

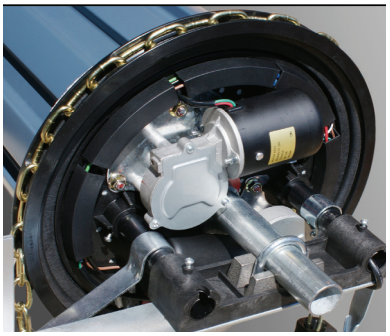

Side View of IGDU drive unit installed on an Industrial Roller Door showing 24 volts DC motors, anti-slip chain guide and chain. Also shown is the anchor block assembly attached to wall bracket with dual anchor pins into the drive housing.

**Features:**

- Twin 24 Volts DC motor operation and service alert feature.
- Fully insulated control box with three button switch mounted on control box to independently control *up, down and stop* operations of the door.
- Built-in safety overload protection, delayed closing feature.
- Suits a wide range of commercial and industrial doors.
- Terminals for additional safety devices like photo cells and edge cell available.
- Minimal field installation is required for the control box which is wall mounted at close proximity to door.

**Options:**

- Simple remote control upgrade (includes receiver, PE beam and 2 handsets).
- Photo electric safety beams are available.
- Wide range of accessory options readily available.

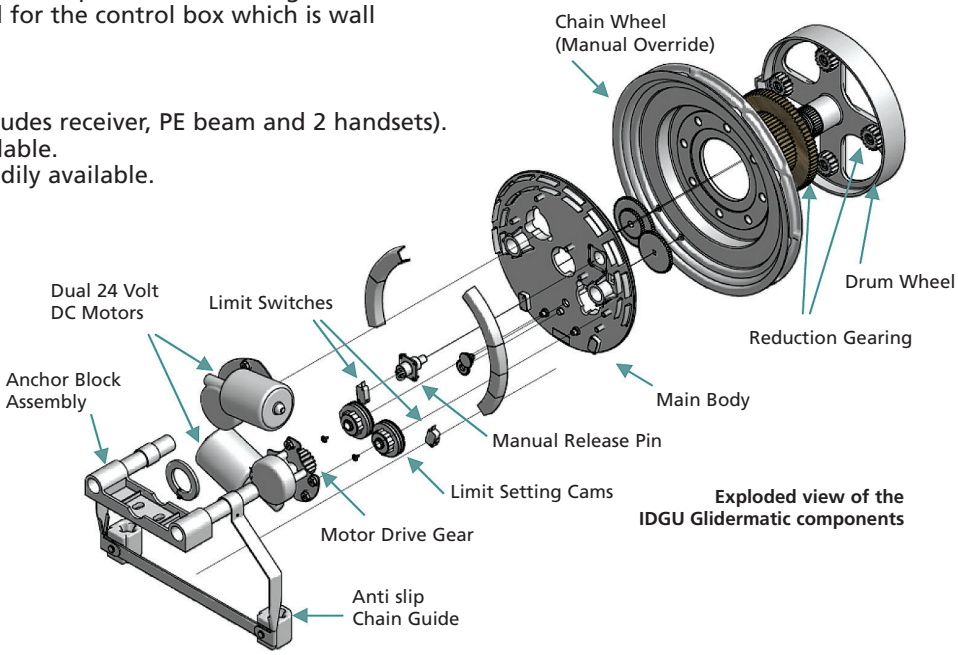


**Exploded view of the IDGU Glidermatic components**

Front view of IGDU control box with inbuilt three button switch to independently control up, down and stop operation of the roller door.

**Options:**

- Simple remote control upgrade (includes receiver, PE beam and 2 handsets).
- Photo electric safety beams are available.
- Wide range of accessory options readily available.

**Automatic Operation**

**Manual Operation**

**Emergency Chain Hoist**

The IGDU unit can be easily put into manual operation in the event of power failure by simply pushing the manual override handle to manual position located at convenient waist high above the floor without having to climb a ladder to reach the operator. The unit can be put back to automatic operation by just pushing back the manual override to auto position.

**Glidermatic IGDU Manual Override Position**

Sectional view of IGDU unit installed to drum wheel.

**Glidermatic™** operator's quality and dependability have been thoroughly tested and successfully proven with over 30 years of service in the field.

Front view of IGDU unit shoeing twin 24 Volts DC motors, limit setting cams etc.

| MINIMUM SIDE ROOM REQUIREMENTS | | |
|---|---|---|
| **Guide Series** | **Overlap** | **Sideroom** |
| **Commercial B Series** | **100mm Overlap** (50mm each side) | **275mm** |

## Available colours are:

Vandyke Brown | Burgundy | Honesty | Merlin Grey | Goosewing Grey | Mushroom | Juniper Green | Olive Green

Navy Blue | Ocean Blue | Terracotta | White | Black | Mahogany Woodgrain | Golden * Oak | Rosewood *

* Laminate finish. The above colours are printed and may not match exactly. Steel colour swatches are available.
The accuracy of the colours displayed here can not be guaranteed and may vary slightly.

ISO 9001:2008 SGS UKAS QUALITY MANAGEMENT 005

DHF Door & Hardware Federation Incorporating DSMA & ABHM

CE Tested and Approved

## Available from:

Samson

6-8 Meadow Close
Finedon Road
Wellingborough
NN8 4BH

GLIDEROL GARAGE DOORS

The Company reserves the right to make changes or improvements to the product or accessories without notice and without incurring any obligation to make similar changes or improvements to goods previously ordered